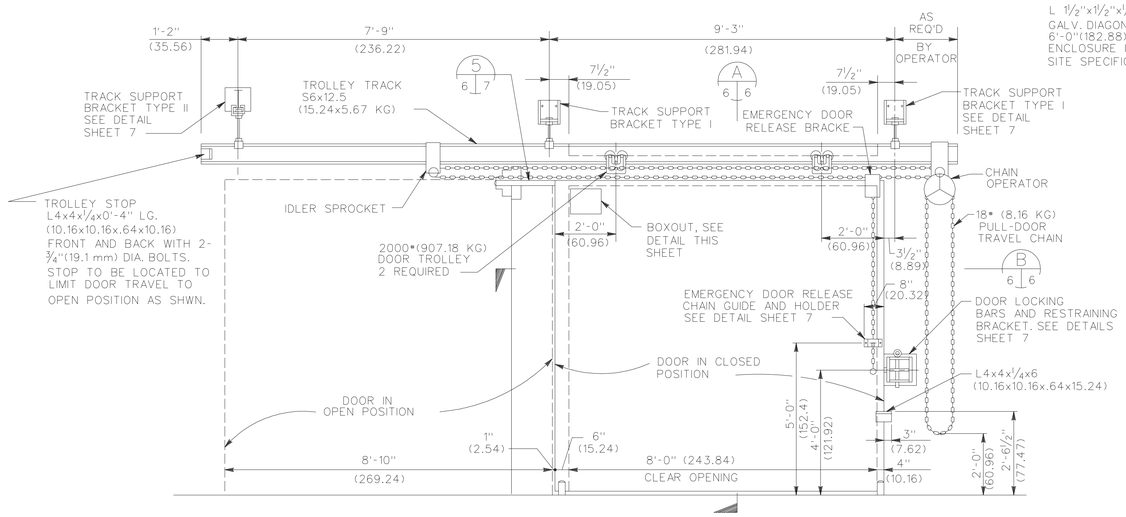

ELEVATION
SCALE: 3/4"=1'-0" (1 = 16)

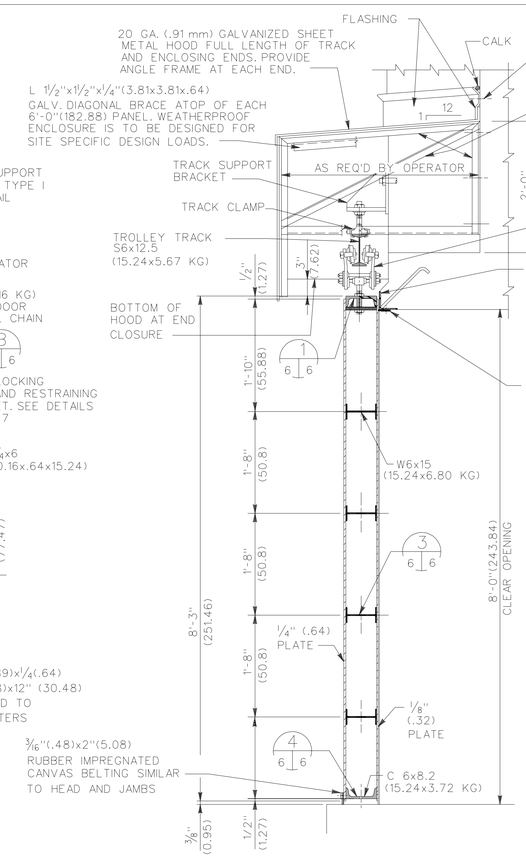

SECTION A
SCALE 1"=1'-0" (1 = 12)

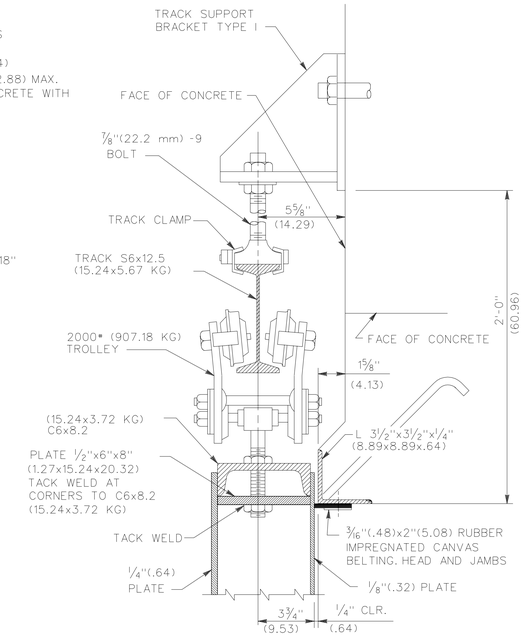

HEAD SECTION
SCALE 3"=1'-0" (1 = 4)

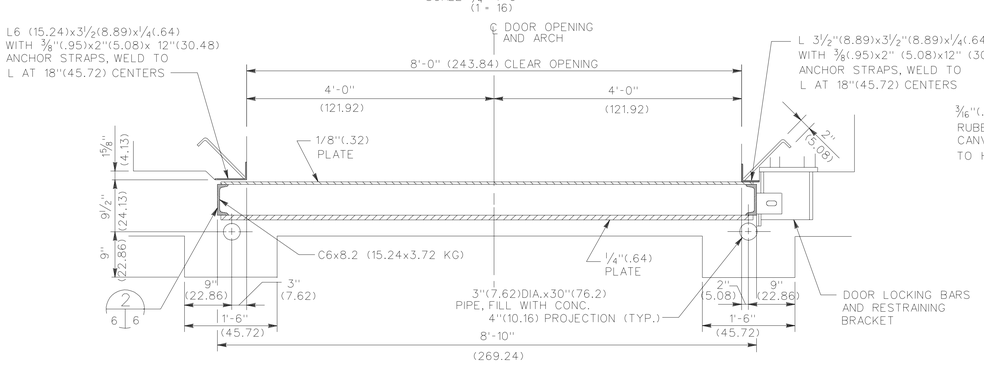

SECTION B
SCALE 1"=1'-0" (1 = 24)

3/16"(.48)x2"(5.08) RUBBER IMPREGNATED CANVAS BELTING SIMILAR TO HEAD AND JAMBS

1/4"(6.4 mm) DIA. x1 1/4"(3.18) GALV. BOLTS, TACK WELD TO PLATE

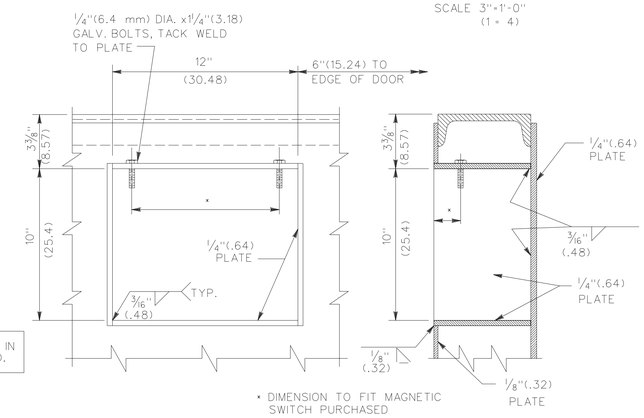

INSIDE ELEVATION — BOXOUT DETAILS — SECTION
SCALE 3"=1'-0" (1 = 4)

THE METRIC DIMENSIONS (BETWEEN THE PARENTHESIS) ARE IN CENTIMETERS ON THIS DRAWING, UNLESS OTHERWISE NOTED.

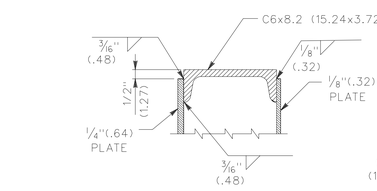

DETAIL 1
SCALE 3"=1'-0" (1 = 4)

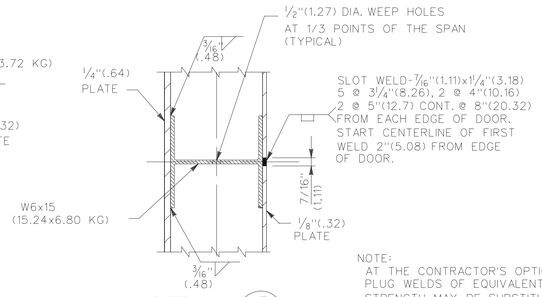

DETAIL 3
SCALE 3"=1'-0" (1 = 4)

NOTE:
AT THE CONTRACTOR'S OPTION, PLUG WELDS OF EQUIVALENT STRENGTH MAY BE SUBSTITUTED FOR THE ABOVE SLOT WELDS.

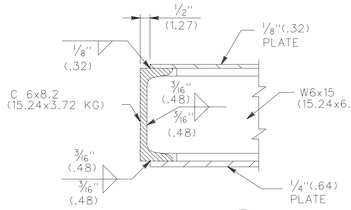

DETAIL 2
SCALE 3"=1'-0" (1 = 4)

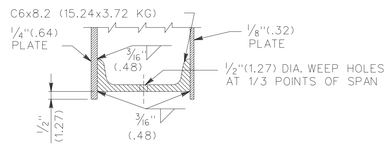

DETAIL 4
SCALE 3"=1'-0" (1 = 4)

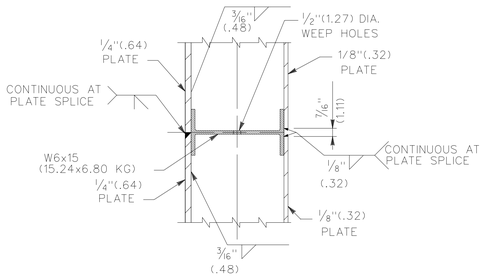

NOTE:
COVER PLATES SHALL BE SPLICED ONLY AS REQUIRED BY THE SIZE OF PLATES AVAILABLE. LOCATION OF SPLICE(S) SHALL BE DETERMINED BY THE CONTRACTOR AND THE SPLICE SHALL CONFORM TO THIS DETAIL.

COVER PLATE SPLICE DETAIL
SCALE 3"=1'-0" (1 = 4)

GRAPHIC SCALES :

3/4" = 1'-0"
1" = 1'-0"

SYMBOL	DESCRIPTION	DATE	APPROVAL
△	GENERAL REVISION/SIMONS-EASTERN CO.	19JUL84	JYM

BLACK & VEATCH
CONSULTING ENGINEERS
KANSAS CITY, MISSOURI

DEPARTMENT OF THE ARMY
OFFICE OF THE CHIEF OF ENGINEERS
MILITARY CONSTRUCTION - ENGINEERING DIVISION
WASHINGTON, D.C.

DRAWN BY: G.I.C.
TRACED BY: G.I.C.
CHECKED BY: H.D.L.
SUBMITTED BY: W.V. HILL
APPROVED: O.F.M. CHIEF ADV. TECH. BR.

MAGAZINE, PRECAST CONCRETE EARTH COVERED
8'-0" BLAST DOOR

APPROVED: LEE S. GARRETTE
CHIEF ENGINEERING DIVISION MIL.PROGR., O.C.E.
DATE: 11APR79

APPROVED FOR:
DATE:

File design number: 84222
File name: 6951s6.dgn

DRAWING NUMBER 421-80-05
SHEET S-6

CONSULTING ENGINEERS
FALLS CHURCH, INDIANA

APPROVED BY _____ FOR THE DEPARTMENT OF THE NAVY
DATE _____

APPROVED BY _____ FOR THE DEPARTMENT OF THE AIR FORCE
DATE _____

6951S6.Dgn

THIS SHEET TRANSFERRED FROM 33-15-74