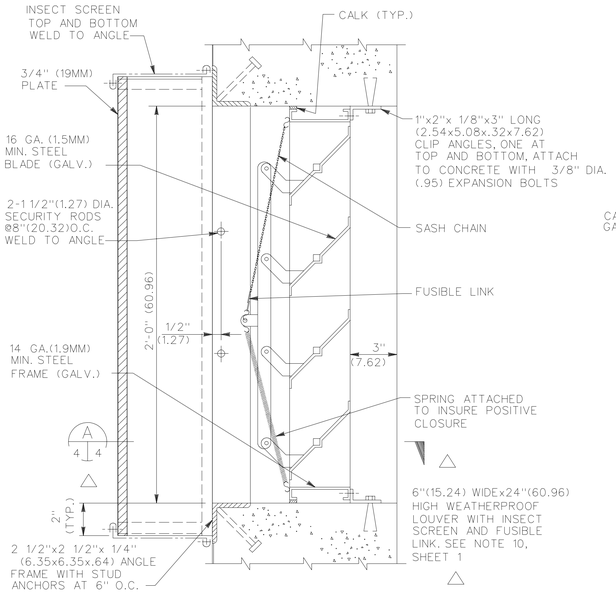

LOUVER DETAIL
SCALE 3"=1'-0" (1 = 4)

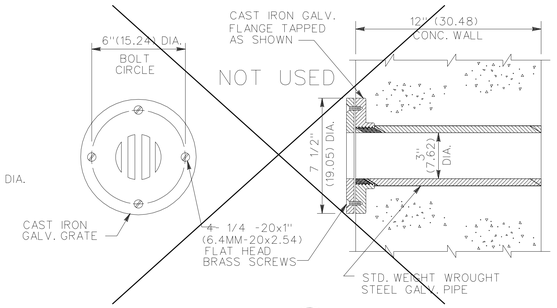

DETAIL 3
SCALE 3"=1'-0" (1 = 4)

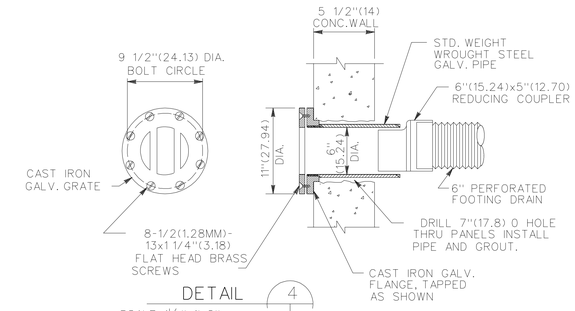

DETAIL 4
SCALE 1½"=1'-0" (1 = 8)

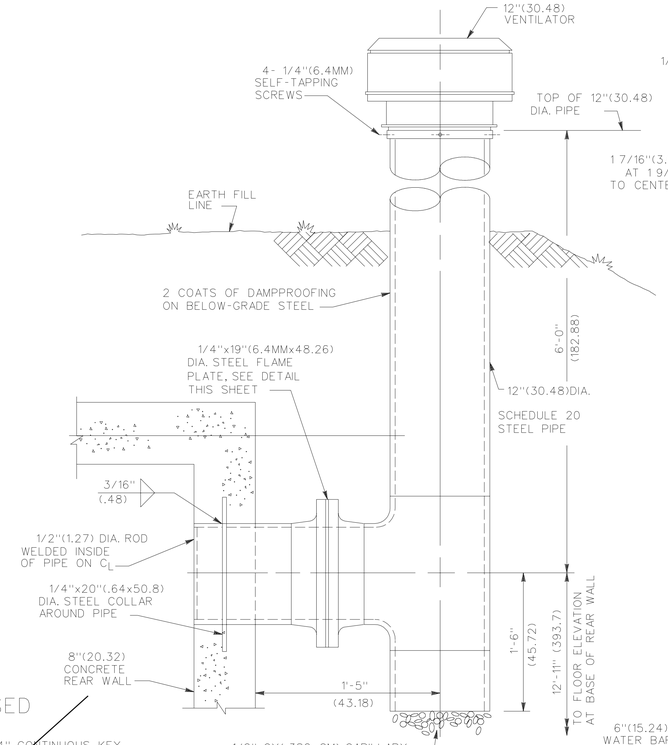

VENTILATOR DETAIL 1
SCALE 1½"=1'-0" (1 = 8)

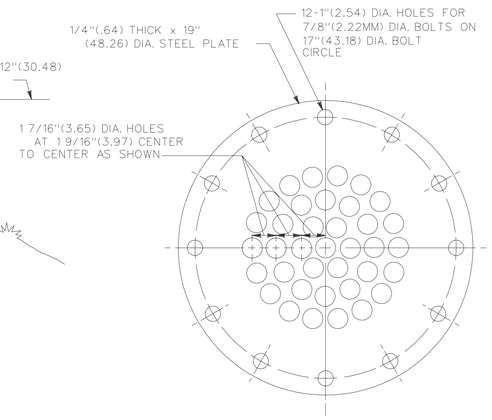

VENTILATOR FLAME PLATE DETAIL
SCALE 3"=1'-0" (1 = 4)

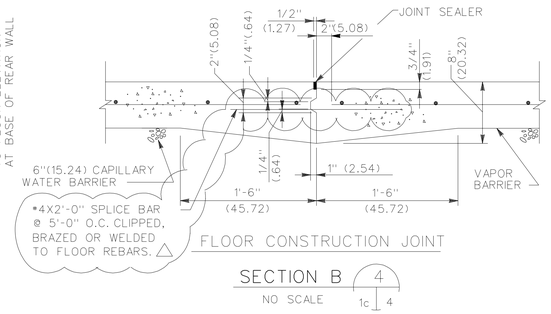

FLOOR CONSTRUCTION JOINT

SECTION B 4
NO SCALE

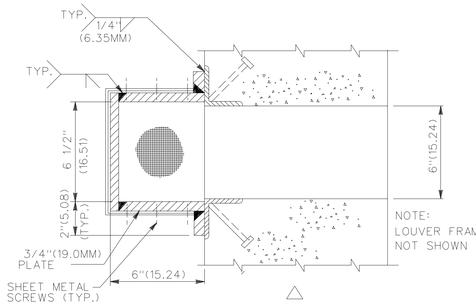

SECTION A
SCALE 3"=1'-0" (1 = 4)

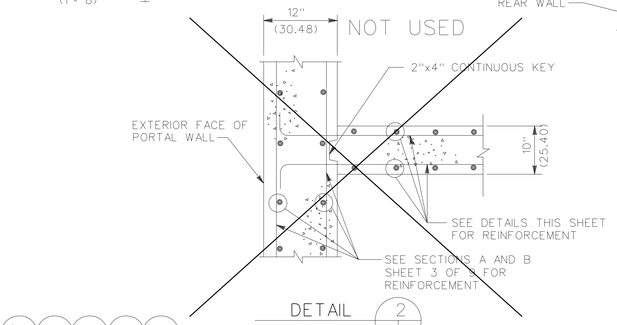

DETAIL 2
NO SCALE

THE METRIC DIMENSIONS (BETWEEN THE PARENTHESIS) ARE IN CENTIMETERS ON THIS DRAWING.

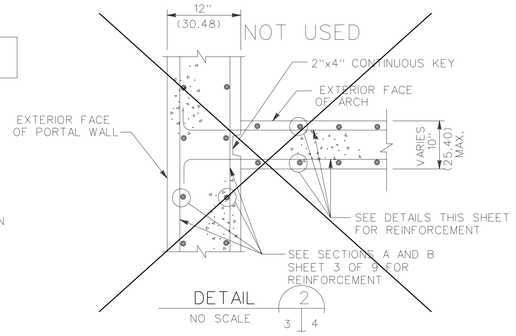

DETAIL 2
NO SCALE

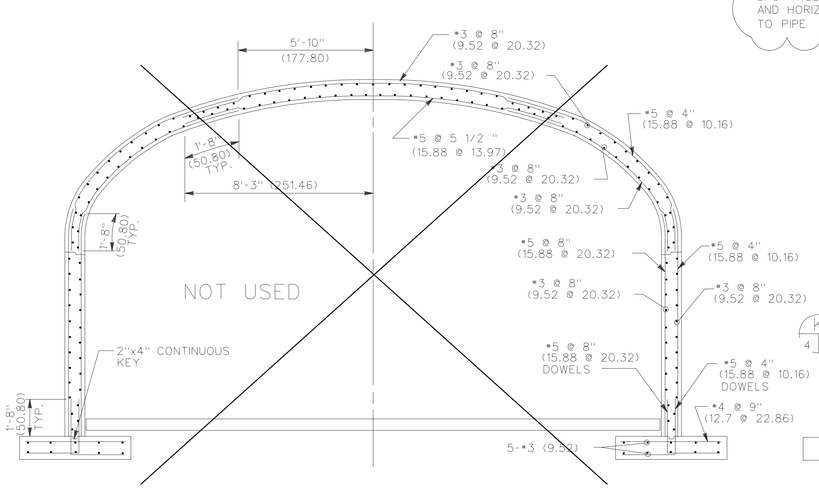

TYPICAL ARCH REINFORCEMENT
SCALE: ⅜"=1'-0" (1 = 32)

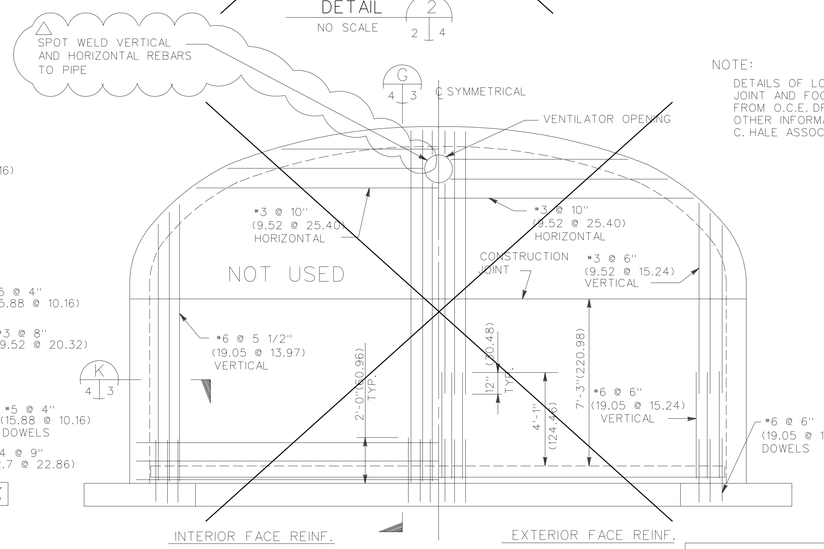

ELEVATION REAR WALL REINFORCEMENT
SCALE: ⅜"=1'-0" (1 = 32)

NOTE:
DETAILS OF LOUVER, FRAME PLATE, CONSTRUCTION JOINT AND FOOTING DRAIN TRANSFERRED INTACT FROM O.C.E. DRAWING NO. 33-15-73, SHEET S4. OTHER INFORMATION ADDED OR REVISED BY NATHAN C. HALE ASSOCIATES TO DEPICT CONCRETE ARCH.

GRAPHIC SCALES:

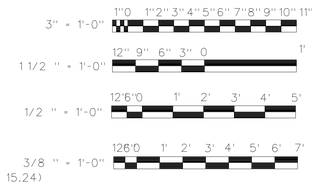

SYMBOL	DESCRIPTION	DATE	APPROVAL
△	GENERAL REVISION FOR LIGHTNING PROTECTION	11JUN98	WAW
△	GENERAL REVISION	30JUN90	AF
△	GENERAL REVISION/SIMONS-EASTERN CO.	19JUL84	JYM

BLACK & VEATCH
CONSULTING ENGINEERS
KANSAS CITY, MISSOURI

DEPARTMENT OF THE ARMY
OFFICE OF THE CHIEF OF ENGINEERS
MILITARY CONSTRUCTION - ENGINEERING DIVISION
WASHINGTON, D.C.

DRAWN BY: G.I.C.
TRACED BY: G.I.C.
CHECKED BY: H.D.L.
SUBMITTED BY: W.V. HILL
APPROVED: O.F.M.
CHIEF ADV. TECH. BR.

MAGAZINE, PRECAST CONCRETE, EARTH COVERED
MISCELLANEOUS DETAILS

APPROVED: LEE S. GARRETTE
CHIEF ENGINEERING DIVISION MIL. PROGR., O.C.E.
DATE: 11APR79

APPROVED FOR:
DATE:

Design File no. 84220
File name: 6951s4.dgn

DRAWING NUMBER 421-80-05
SHEET S-4

CONSULTING ENGINEERS
FALLS CHURCH, INDIANA

APPROVED BY _____ FOR THE DEPARTMENT OF THE NAVY
DATE _____

APPROVED BY _____ FOR THE DEPARTMENT OF THE AIR FORCE
DATE _____