WEIGHT OF AN "HM" ELEMENT=12,200# [5,500kg]

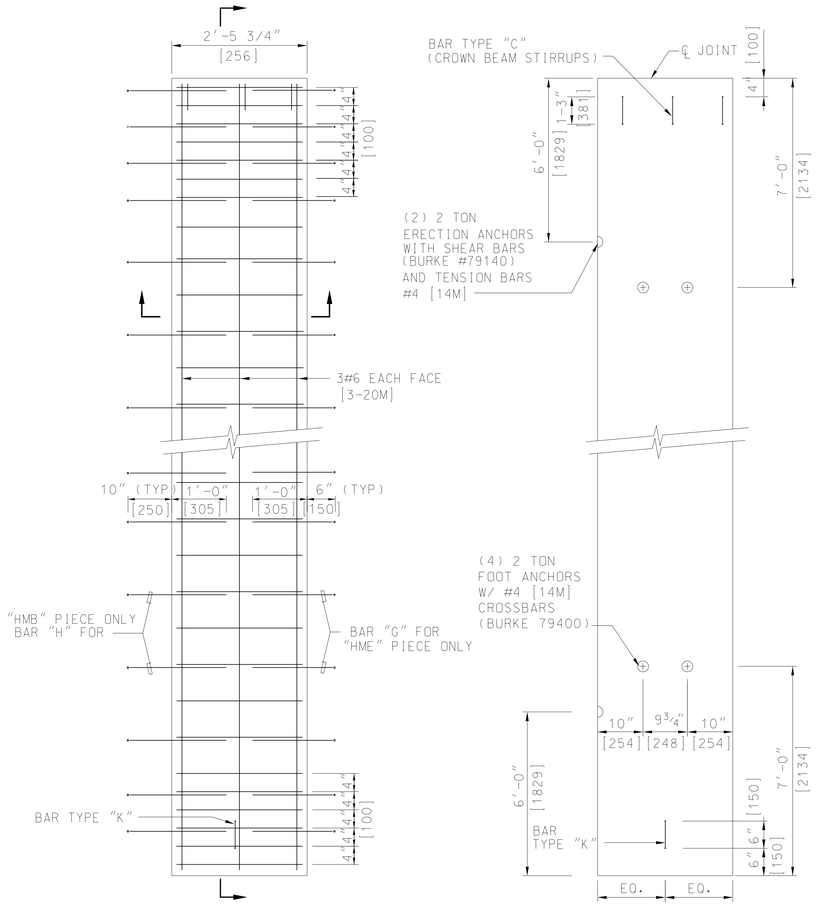

INSIDE FACE
FOR "HMB" & "HMF" PIECES
SCALE: 3/4"=1'-0"

OUTSIDE FACE
"HM" PIECES
SCALE: 3/4"=1'-0"

NOTE : BARS "G" AND "H" MAY BE REPLACED BY THE DOWEL BAR REPLACEMENT DEVICE, SEE DETAIL SHEET 3a.

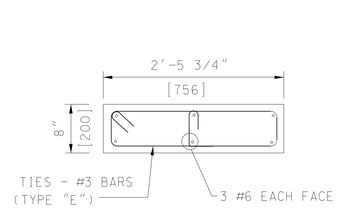

SECTION A-A
SCALE: 1"=1'-0"

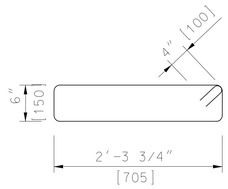

TYPE E
#3 [10M] REBAR
SCALE: 1"=1'-0"

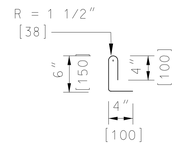

TYPE B
#3 [10M] REBAR
SCALE: 1"=1'-0"

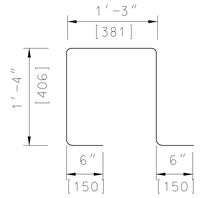

TYPE C
#3 [10M] REBAR
SCALE: 1"=1'-0"

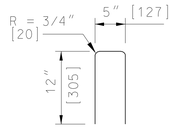

TYPE D
#3 [10M] REBAR
SCALE: 1"=1'-0"

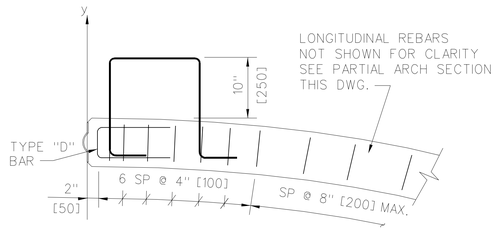

CROWN BEAM DETAIL

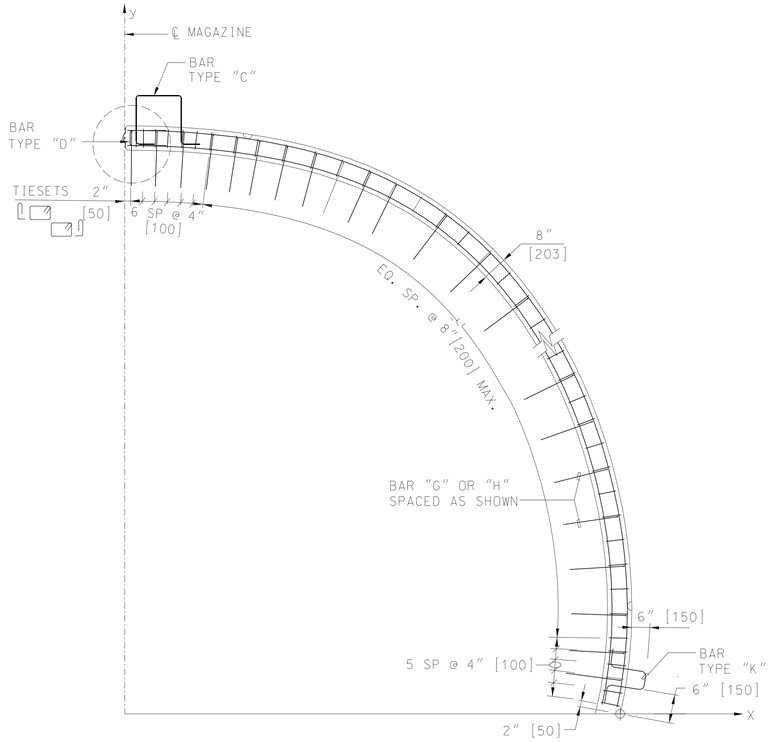

ARCH SECTION - "M" PIECE
SCALE: 1/2"=1'-0"

US Army Corps of Engineers

Symbol	Description	Date	Approved	Symbol	Description	Date	Approved

Date: July 98
Rev.
Design file no. 98 - 421-80-05
Drawing code: 84218
File name: 6951S3B.dgn
Plot date: -
Plot scale 1: -

Designed by: Kim Truong
Dwn by: DM/KC
Ckd by: KT
Reviewed by: KT
Submitted by: KT

U. S. ARMY ENGINEERING AND SUPPORT CENTER, HUNTSVILLE
HUNTSVILLE, ALABAMA

TechSpan ® System

Sheet reference number:
421-80-05
Sheet S-3b

6951S3b.DGN