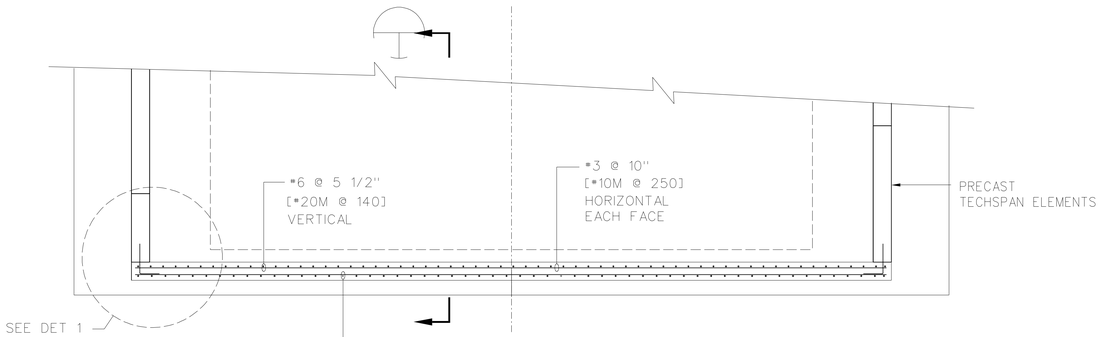

PLAN REAR WALL

SCALE 3/8"=1'-0"

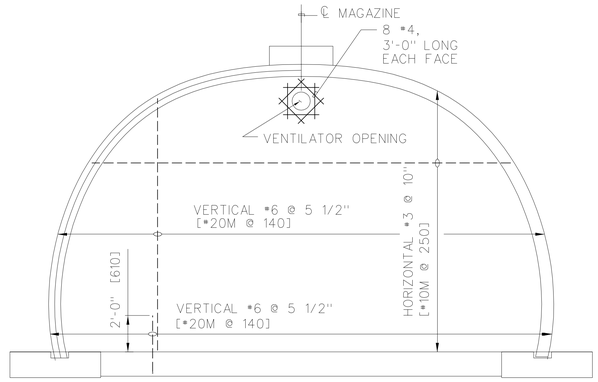

REAR WALL INTERIOR REINFORCEMENT

SCALE 1/4"=1'-0"

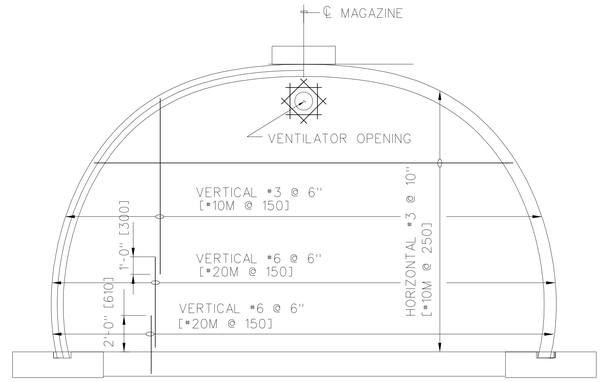

REAR WALL EXTERIOR REINFORCEMENT

SCALE 1/4"=1'-0"

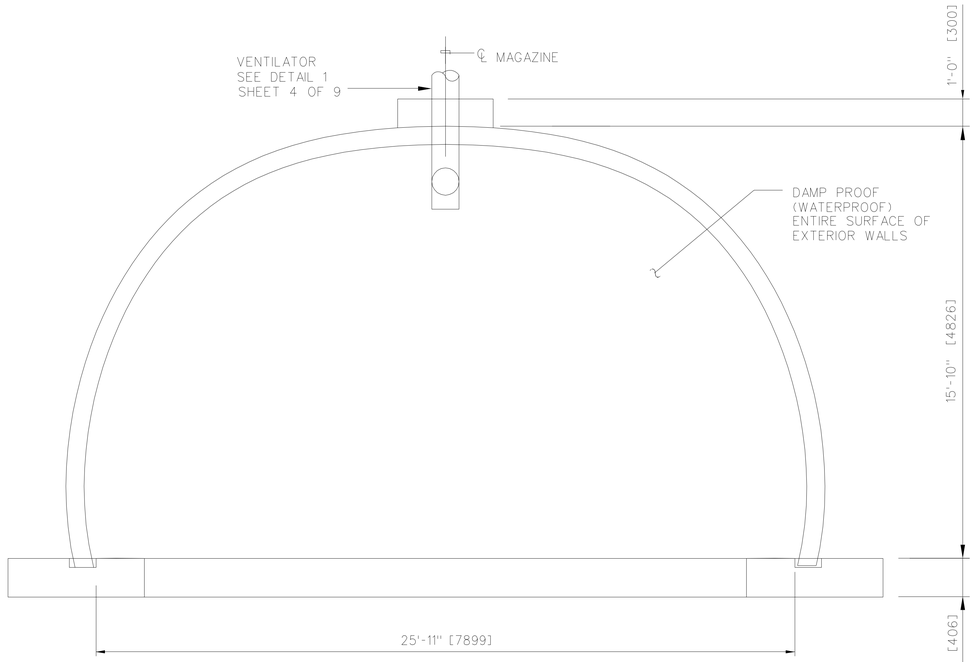

ELEVATION REAR WALL

SCALE 1/4"=1'-0"

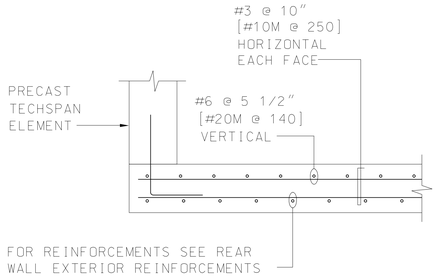

DETAIL 1

SCALE: 1"=1'-0"

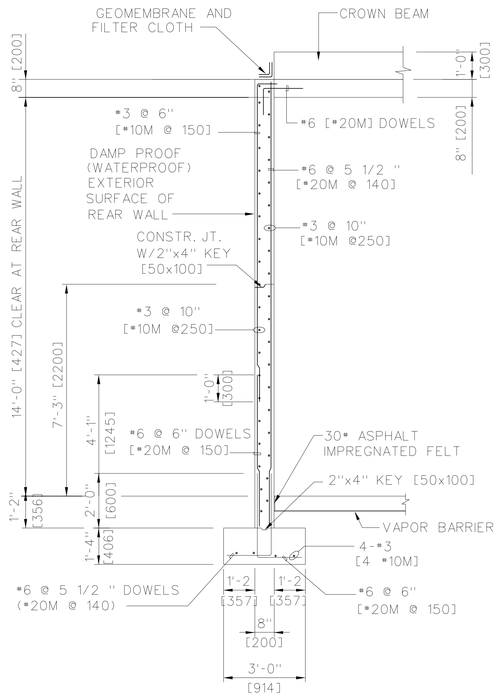

SECTION A

SCALE: 3/8"=1'-0"

US Army Corps of Engineers

Symbol	Description	Date	Approved	Symbol	Description	Date	Approved

Designed by: Kim Truong	Date: July 98
Dwn by: DM/KC	Ckd by: KT
Reviewed by: KT	Submitted by: KT
	Rev.
Design file no. 84216	
Drawing code: 421-80-05	
File name: 6951S3.dgn	
Plot date: -	
Plot scale: -	

U. S. ARMY ENGINEERING AND SUPPORT CENTER, HUNTSVILLE
HUNTSVILLE, ALABAMA

TechSpan ® System

Sheet reference number:
421-80-05

Sheet S-3

6951S3.DGN