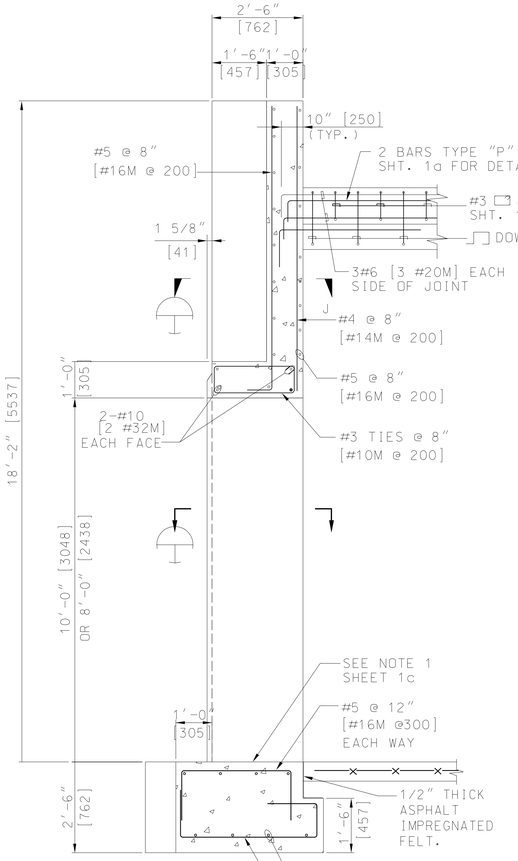


SECTION A
SCALE: 1/2"=1'-0"

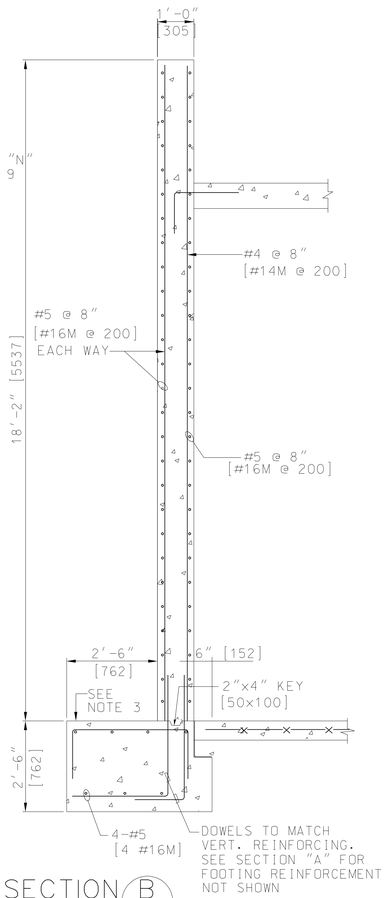


SECTION B
SCALE: 1/2"=1'-0"

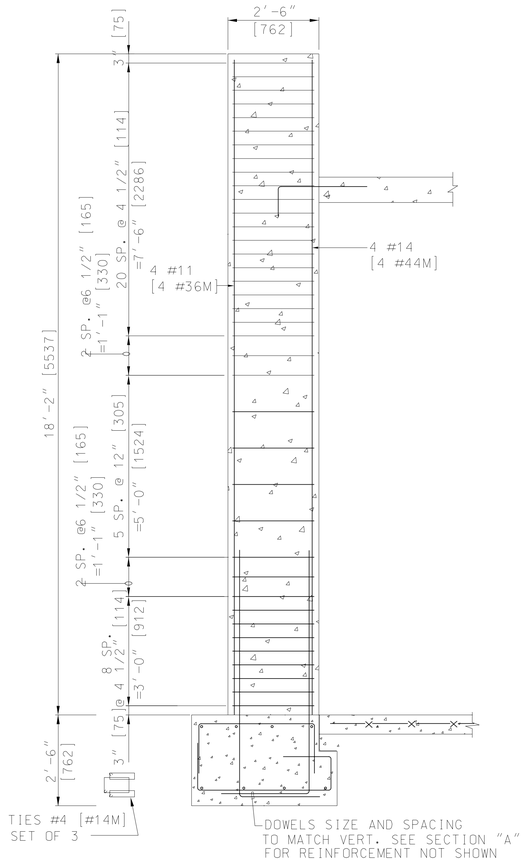


SECTION C
SCALE: 1/2"=1'-0"

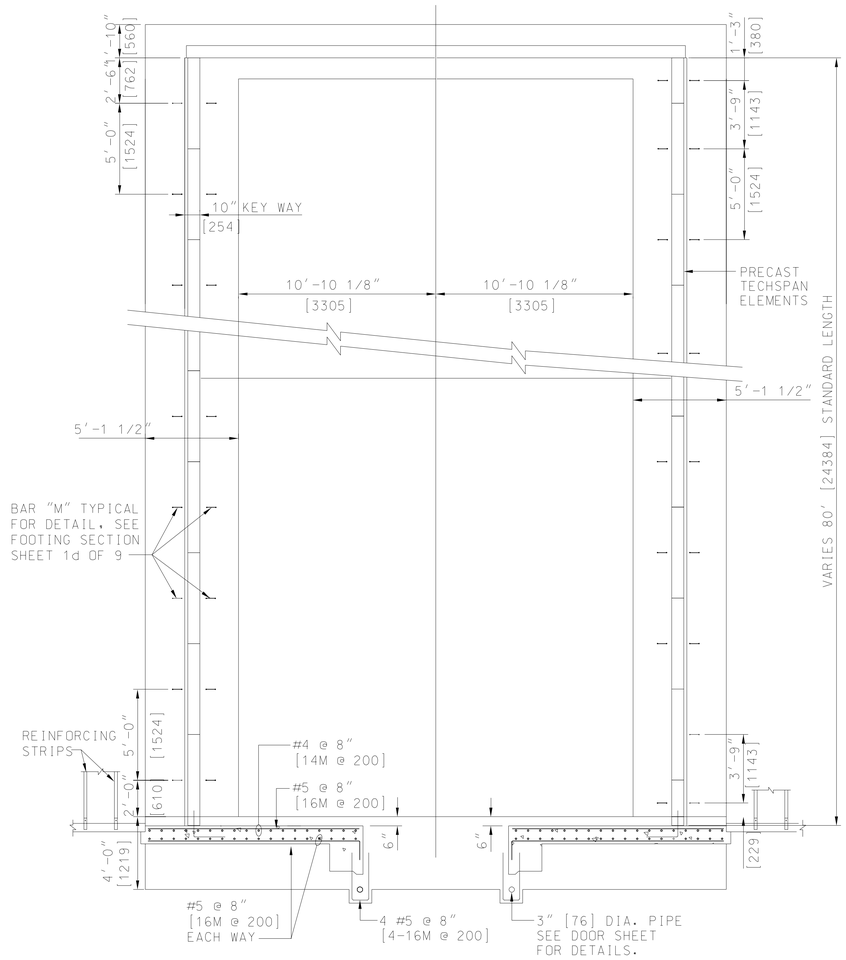


FOOTING PLAN
SCALE: 1/4"=1'-0"

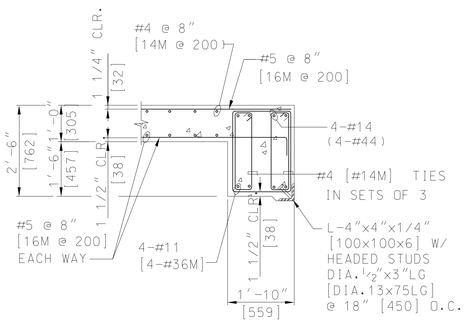


SECTION H
SCALE: 1/2"=1'-0"

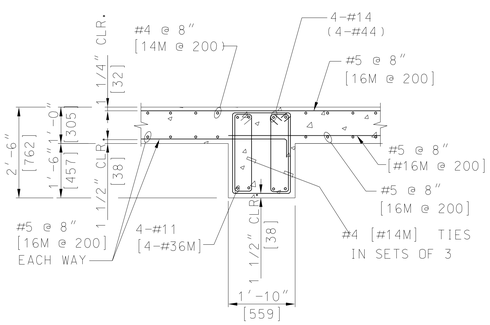


SECTION J
SCALE: 1/2"=1'-0"

US Army Corps of Engineers

| Symbol | Description | Date | Approved | Symbol | Description | Date | Approved |
|---|---|---|---|---|---|---|---|

Designed by: Kim Truong
Dwn by: DM/KC
Ckd by: KT
Reviewed by: KT
Submitted by: KT
Date: July 98
Rev.
Design file no. 84215
Drawing code: 421-80-05
File name: 6951S2.dgn
Plot date:
Plot scale: 1 :

U. S. ARMY ENGINEERING AND SUPPORT CENTER, HUNTSVILLE
HUNTSVILLE, ALABAMA

TechSpan® System

Sheet reference number:
421-80-05
Sheet S-2

6951S2.DGN