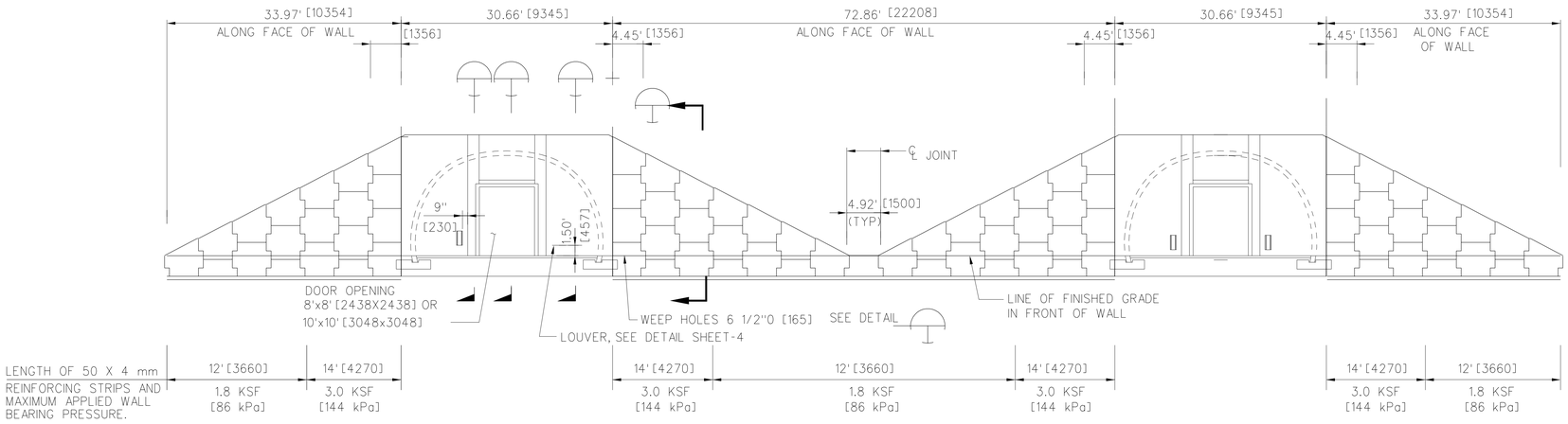

ELEVATION PORTAL WALLS & REINFORCED EARTH WING WALLS

SCALE : 1" = 10'

NOTE:

1. IF, AS A RESULT OF THE FOUNDATION INVESTIGATION OR LOCAL FROST CONDITIONS, IT IS DETERMINED THAT ANY OR ALL WALL FOOTING MUST BE LOWERED, THE APPROPRIATE WALL AND FOOTING DESIGNS MUST BE CHECKED AND ADJUSTED AS REQUIRED TO SUIT THESE CONDITIONS.
2. FOOTINGS ARE SIZED FOR A NET SOIL BEARING VALUE OF 3,000 P.S.F. [144 kPa] FOOTINGS MUST BE REDESIGNED IF THE SOILS INVESTIGATION DOES NOT CONFIRM THIS BEARING CAPACITY.
3. LOUVERS ARE OPTIONAL. THEIR NECESSITY AND SIZE SHALL BE DETERMINED DURING THE SITE-ADAPTION PROCESS BASED ON MATERIALS TO BE STORED AND GEOGRAPHICAL LOCATIONS. THE LOUVER WIDTH OF 6 INCHES [150] SHALL BE MAINTAINED. THE HEIGHT MAY BE VARIED AS NECESSARY.

KM5

NO. OF REINFORCING STRIPS/TIE STRIP

PANEL NAME

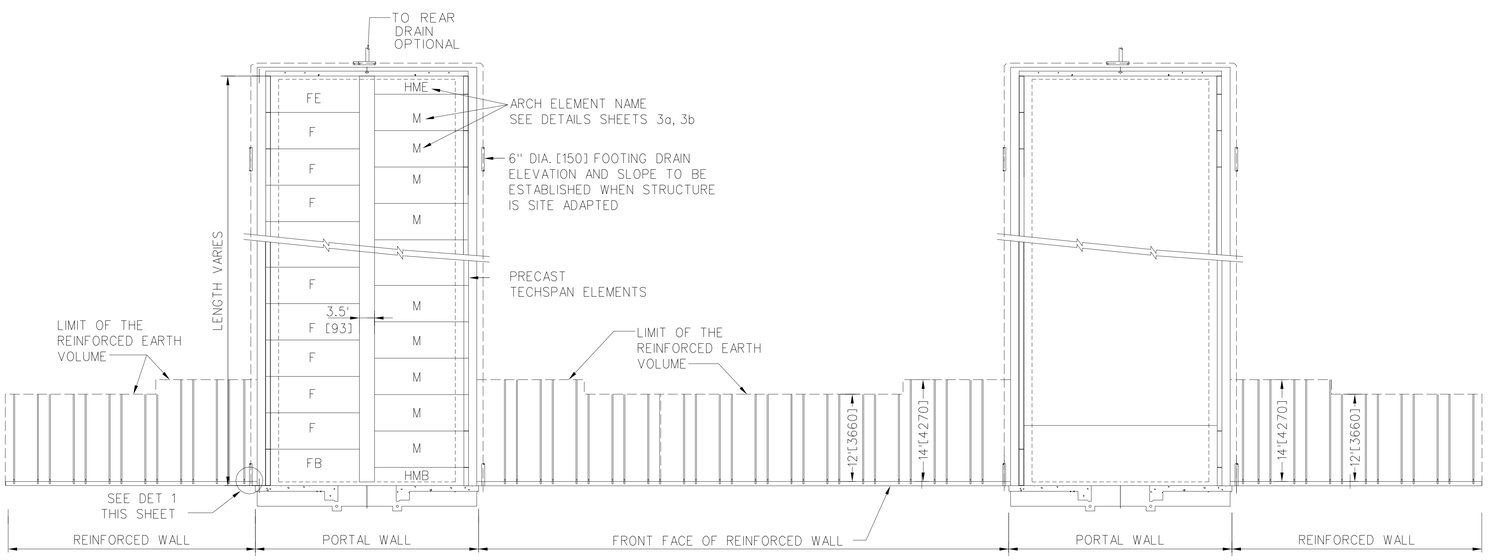

PLAN

SCALE: 1" = 10'

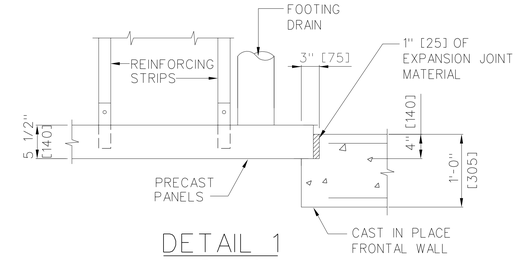

DETAIL 1

SCALE: 1"=1'-0"

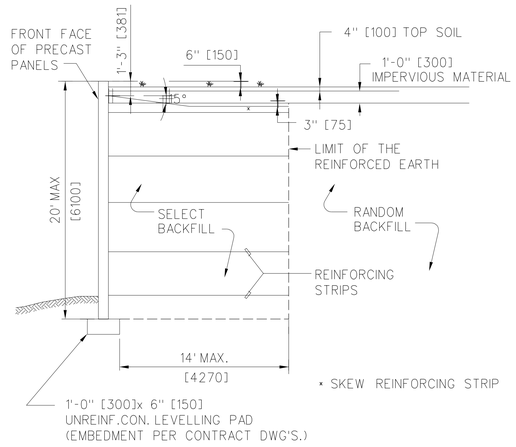

SECTION D

N.T.S.

US Army Corps of Engineers

Symbol	Description	Date	Approved	Symbol	Description	Date	Approved

Designed by: Kim Truong
Dwn by: DM/KC
Ckd by: KT
Reviewed by: KT
Submitted by: KT
Date: July 98
Design file no. 84212
Drawing code: 421-80-05
File name: 6951S1B.dgn
Plot date: -
Plot scale: 1:
Rev.

U. S. ARMY ENGINEERING AND SUPPORT CENTER, HUNTSVILLE
HUNTSVILLE, ALABAMA

TechSpan ® System

Sheet reference number:
421-80-05
Sheet S-1b

6951S1b.DGN