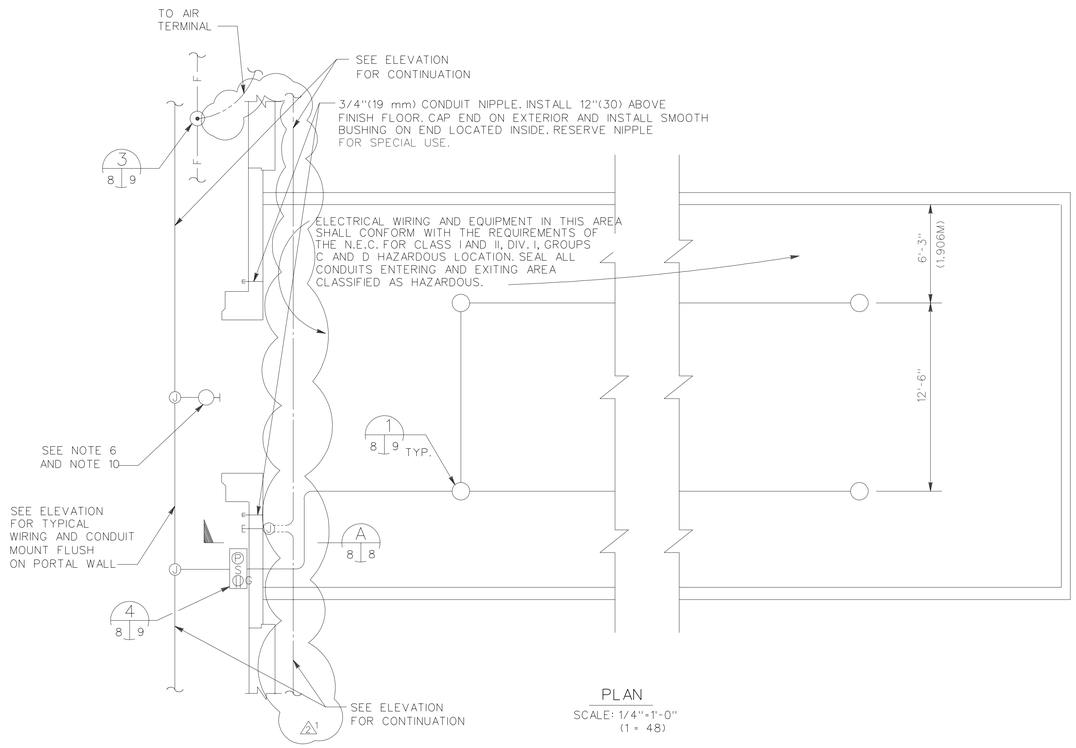

PLAN
SCALE: 1/4"=1'-0"
(1 = 48)

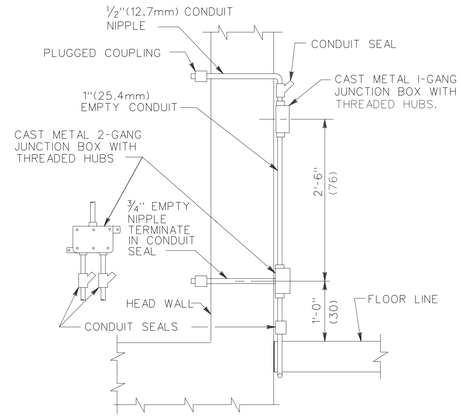

SECTION A
SCALE 1"=1'-0"
(1 = 12)

LEGEND (FOR SHEETS E-1 AND E-2)

- WALL MOUNTED EXTERIOR LIGHTING FIXTURE. SEE NOTE 6.
- CEILING MOUNTED LIGHTING FIXTURE. SEE DETAIL 1/8|9
- 3-GANG OUTLET BOX WITH SINGLE GANG COVER FOR PILOT LAMP, SINGLE POLE SWITCH AND DUPLEX CONVENIENCE OUTLET WITH GROUND FAULT INTERRUPTER ALL SUITABLE FOR USE OUTDOORS.
- JUNCTION BOX, CAST METAL WITH THREADED WALLS OR HUBS.
- CONDUIT RUN CONCEALED BELOW GRADE OR FLOOR SLAB. NOTE: ANY CONDUIT RUN NOT OTHERWISE INDICATED SHALL BE 1/2"(12.7 mm) AND CONTAIN THREE NO.12 AWG.(3.3 SQ.mm) WIRES. A GREATER NUMBER OF WIRES ARE SHOWN WITH CROSS LINES AS FOLLOWS: — GROUND CONDUCTOR
  THE LONG CROSS LINE INDICATES THE IDENTIFIED GROUNDED NEUTRAL CONDUCTOR AND THE SHORT CROSS LINES INDICATES THE PHASE CONDUCTORS. UNLESS OTHERWISE INDICATED, ALL CONDUCTORS ARE NO. 12 AWG (3.3SQ.mm)
- CONDUIT RUN INSTALLED EXPOSED ON WALLS OR CEILING. WIRING SHALL BE SAME AS IN NOTE FOR CONCEALED COINDUIT RUN.
- AUXILIARY EMPTY CONDUIT RUN CONCEALED BELOW GRADE OR FLOOR SLAB SIZED AS INDICATED.
- CONDUIT TERMINATED WITH A PLUGGED COUPLING.
- VALVE TYPE SECONDARY SURGE ARRESTER (L.A.)
- LIGHTNING AIR TERMINAL. EXTEND 4'-0"(61) ABOVE PROTECTED OBJECT.
- GROUND ROD
- —F— FACILITY COUNTERPOISE SYSTEM, NO.1/0 AWG.(53.5 SQ.mm) BARE COPPER WIRE.
- DOWN CONDUCTOR FROM AIR TERMINAL, NO. 2 AWG. (33.6 SQ.mm) BARE COPPER WIRE.
- 2'-6" (76.2) UNLESS OTHERWISE INDICATED, THE PARENTHETIC METRIC DIMENSIONS SHOWN ARE IN CENTIMETERS AND ARE MINIMUM ACCEPTABLE.

NOTES: (FOR SHEETS E-1 AND E-2)

1. HOLES SHALL NOT BE MADE IN CONCRETE ARCH ROOFING FOR INSTALLATION OF ELECTRICAL WORK.
2. THE CONDUIT SYSTEM ON THE FRONT OF STRUCTURE IS TO HAVE SUPPORTS SPACED NOT MORE THAN 8'-0"(243.8). SUPPORTS ON EACH SIDE OF CONSTRUCTION JOINTS SHALL NOT EXCEED 5'-0"(152).
3. RUNNING THREAD COUPLING CONNECTIONS ARE NOT PERMITTED FOR THE RIGID CONDUIT SYSTEMS.
4. FOR THE 120/240 VOLT, SINGLE PHASE, 3-WIRE SERVICE, INSTALL A 1 1/2" (38.1 mm) EMPTY CONDUIT 2'-0"(61) BELOW FINISHED GRADE AND TERMINATE WITH A PLUGGED COUPLING NOT LESS THAN 5'-0"(152) BEYOND PAVED AREA.
5. FOR THE INSTALLATION BY OTHERS OF A TELEPHONE TYPE CABLE, INSTALL 2 1 1/2"(38.1 mm) CONDUITS WITH PULL WIRE, 2'-0"(61) BELOW FINISHED GRADE AND TERMINATE WITH A PLUGGED COUPLING NOT LESS THAN 5'-0"(152) BEYOND PAVED AREA. (3)
6. THE LIGHTING FIXTURE SHOULD BE INCANDESCENT TYPE WBTH-414. ALL EXTERIOR LIGHTS SHALL BE CONNECTED ON THE SAME CIRCUIT TO FACILITATE CONTROL AT THE PANEL BOARD. HOWEVER, NOT MORE THAN EIGHT FIXTURES SHALL BE CONNECTED TO ANY ONE 20 AMP CIRCUIT.
7. THE NUMBER OF INTERIOR LIGHTING FIXTURES VARIES, DEPENDING ON INTERNAL LENGTH OF MAGAZINE, AS FOLLOWS:

LENGTH OF MAGAZINE	NO. OF FIXTURES
20'-24' (6.1-7.3 M)	4
25'-36' (7.6-11 M)	4
37'-48' (11.3-14.6 M)	4
49'-60' (14.9-18.3 M)	6
61'-89'(18.6-27.1 M)	8

8. INSTALL AN INTERMEDIATE AIR TERMINAL OVER STRUCTURE WHERE INTERIOR LENGTH OF MAGAZINE EXCEEDS 48 FEET (SEE SHEET E-2).
9. SHEETS E-1 AND E-2 HAVE BEEN ADAPTED FROM O.C.E. DWG. NO. 33-15-74, SHEETS E-1 AND E-2 SHOWING ELECTRICAL PROVISIONS FOR SIMILAR STEEL ARCH STEEL ARCH MAGAZINE. NOTES 7 THRU 9 ARE NEW, AS ARE FIXTURE MOUNTING, GROUND FAULT INTERRUPTER AND AIR TERMINAL PROVISIONS (FOR MAGAZINES LONGER THAN 50 FT.).
10. BRACKET LIGHT FIXTURE AWAY FROM FRONT WALL TO PROVIDE LIGHT ON MAGAZINE DOOR.

THE METRIC DIMENSIONS (BETWEEN THE PARENTHESIS) ARE IN IN CENTIMETERS ON THIS DRAWING, UNLESS OTHERWISE NOTED.

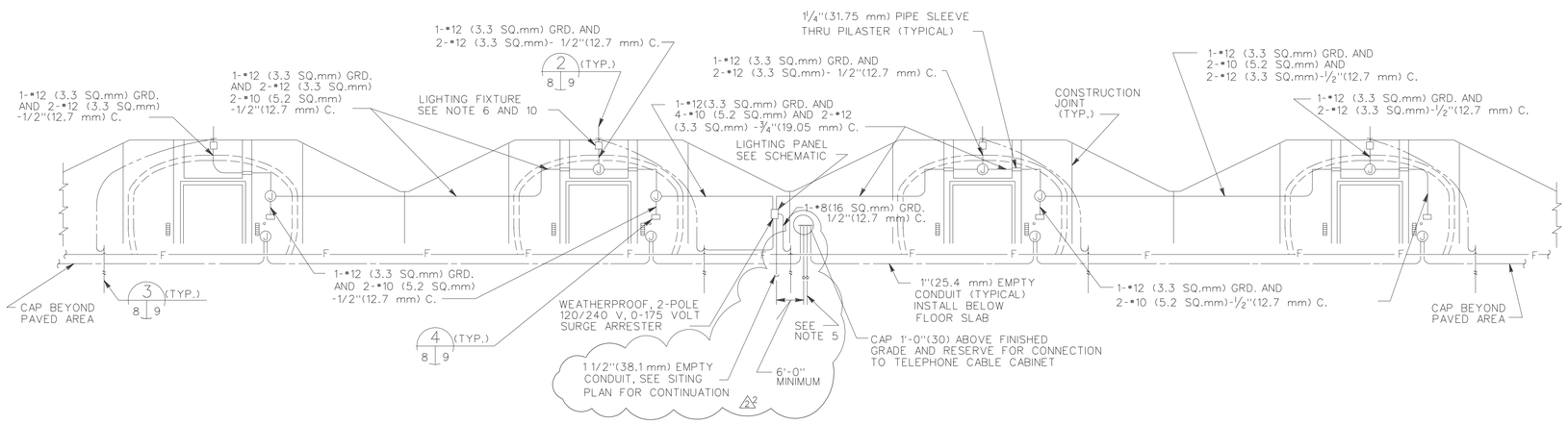

ELEVATION
NOT TO SCALE

GRAPHIC SCALE
1/4 " = 1'-0" 5' 0 5'

SYMBOL	DESCRIPTION	DATE	APPROVAL
3	GENERAL REVISION/LIGHTNING PROTECTION	11JUN98	WLS
1	GENERAL REVISION/SIMONS-EASTERN CO.	19JUL84	JYM

BLACK & VEATCH
CONSULTING ENGINEERS
KANSAS CITY, MISSOURI

DEPARTMENT OF THE ARMY
OFFICE OF THE CHIEF OF ENGINEERS
MILITARY CONSTRUCTION - ENGINEERING DIVISION
WASHINGTON, D.C.

DRAWN BY: P.Z.
TRACED BY: P.Z.
CHECKED BY: N.J.A.
SUBMITTED BY: W.V. HILL
APPROVED: O.F.M. CHIEF ADV. TECH. BR.
APPROVED: LEE S. GARRETTE CHEF ENGINEERING DIVISION MIL. PROGR., O.C.E.
DATE: 11APR79

MAGAZINE, PRECAST CONCRETE, EARTH COVERED
ELECTRICAL PLAN AND SECTIONS

APPROVED BY _____ FOR THE DEPARTMENT OF THE NAVY
DATE _____

CONSULTING ENGINEERS
FALLS CHURCH, INDIANA

APPROVED BY _____ FOR THE DEPARTMENT OF THE AIR FORCE
DATE _____

APPROVED FOR:
DATE: _____

Design file no: 84224
File name: 6951e1.dgn
DRAWING NUMBER 421-80-05
SHEET E-1

THIS SHEET TRANSFERRED FROM 33-15-74