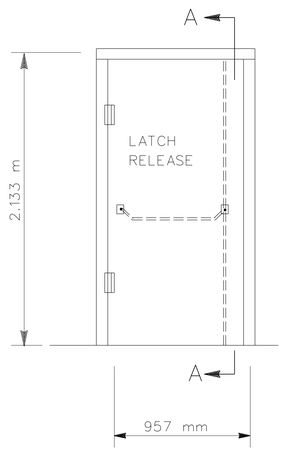

EXTERIOR ELEVATION

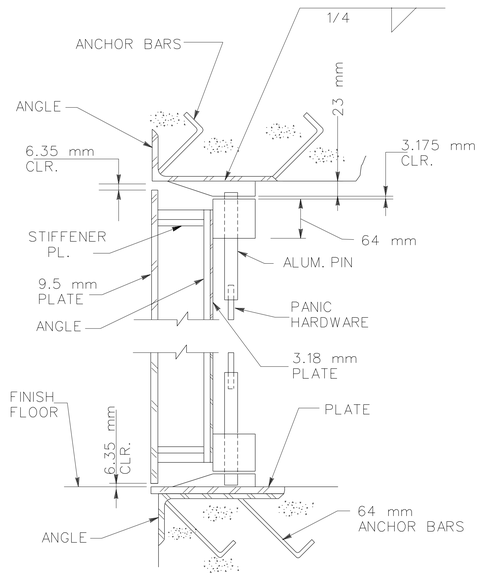

SECTION A-A

SINGLE-LEAF BLAST DOOR

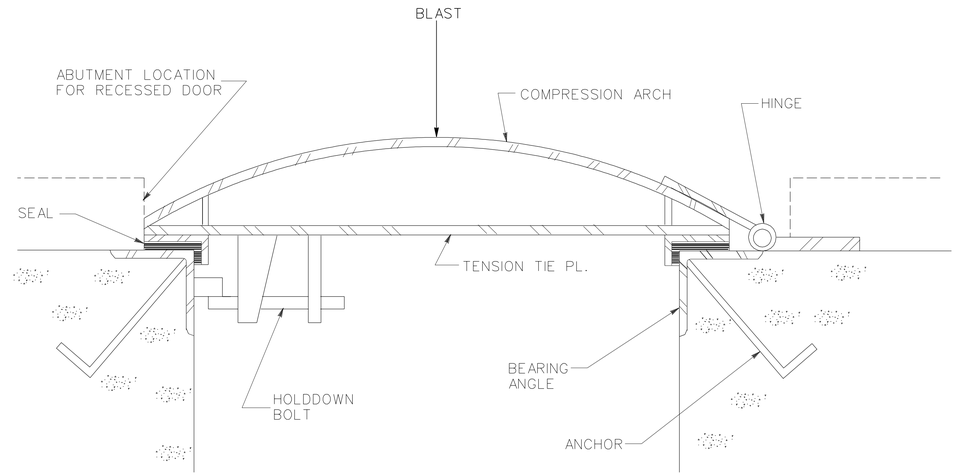

HORIZONTAL SECTION

COMPRESSION ARCH DOOR

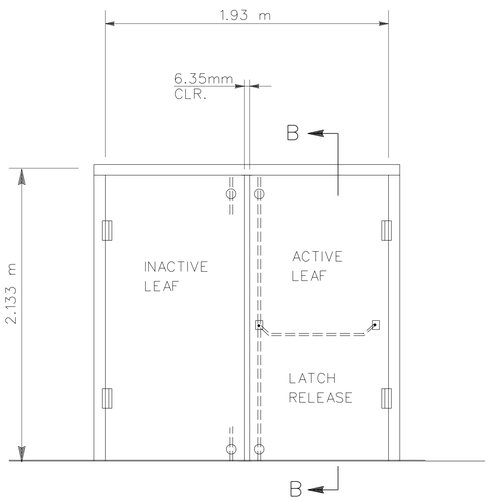

EXTERIOR ELEVATION

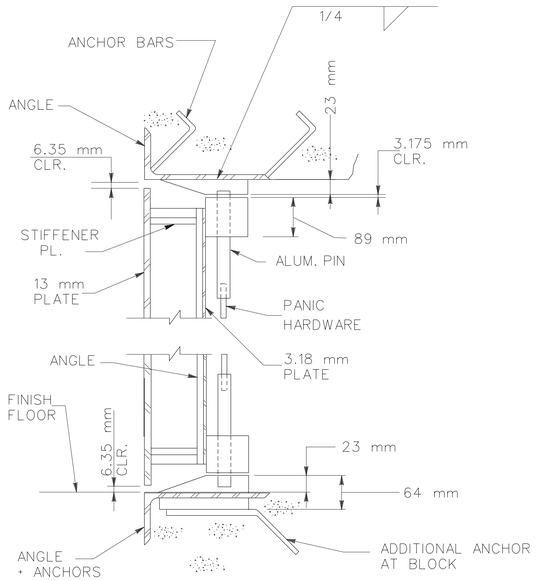

SECTION B-B

DOUBLE-LEAF BLAST DOOR

US Army Corps of Engineers

Symbol	Description	Date	Approved	Symbol	Description	Date	Approved

Designed by: WAW
Dwn by: RLA
Ckd by:
Reviewed by:
Submitted by:
Date: 15 NOV 96
Rev.
Design file no. 83073
Drawing code: DEF 421-80-04
File name: WWUNS7.DGN
Plot date:
Plot scale:

U. S. ARMY ENGINEERING AND SUPPORT CENTER, HUNTSVILLE
HUNTSVILLE, ALABAMA

DEFINITIVE DRAWINGS
UNDERGROUND AMMUNITION STORAGE FACILITY
BLAST DOOR TYPES

Sheet reference number:
S - 7
Sheet of

WWUNS7.DGN