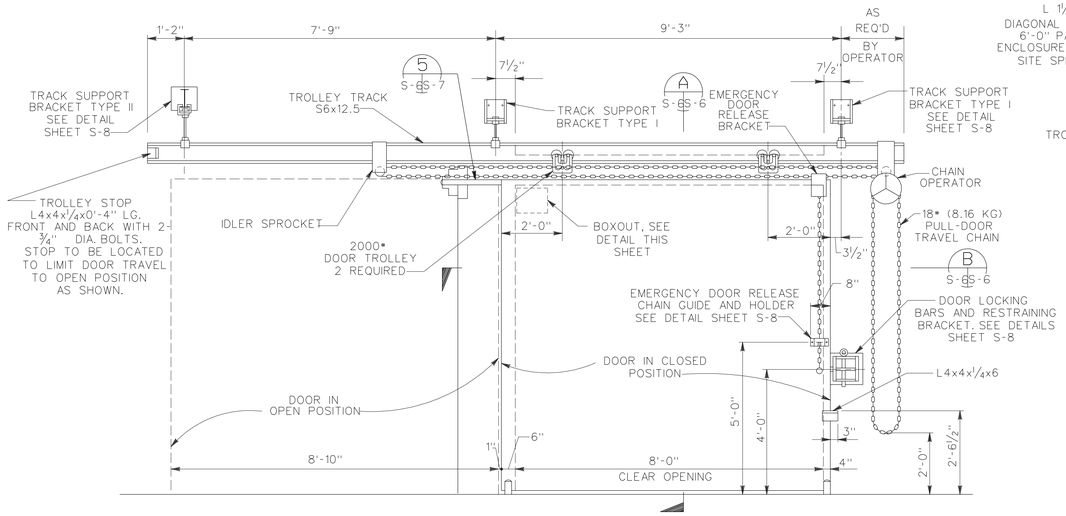

ELEVATION
SCALE: ¾"=1'-0"

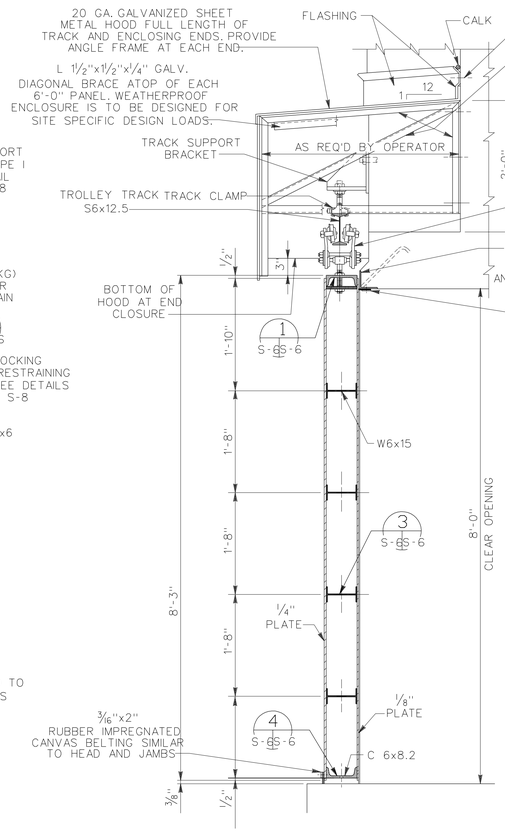

SECTION A
SCALE 1"=1'-0"

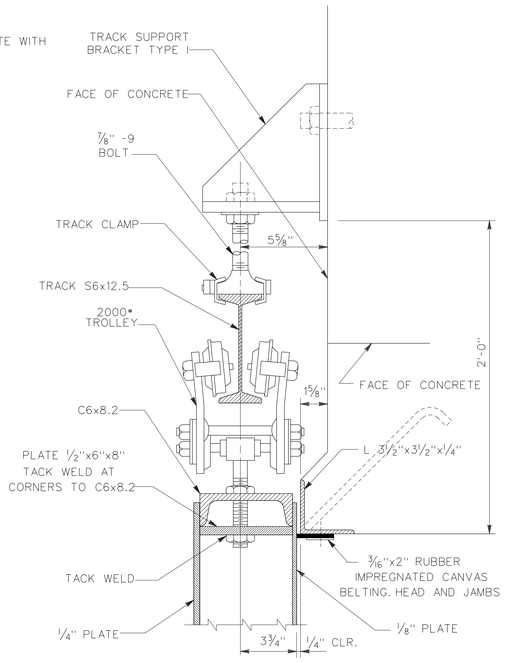

HEAD SECTION
SCALE 3"=1'-0"

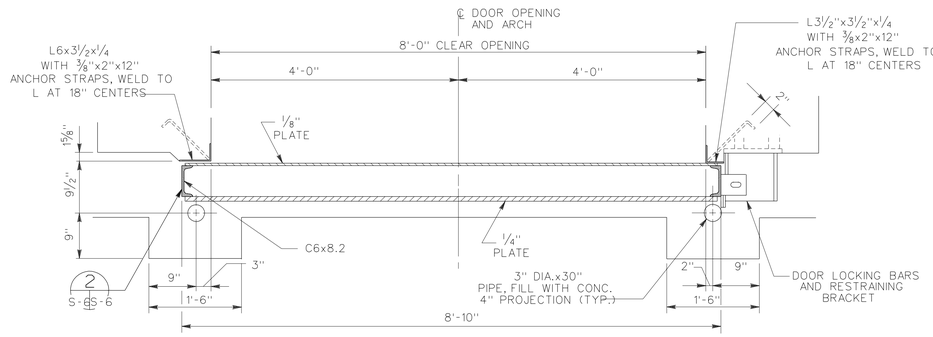

SECTION B
SCALE 1"=1'-0"

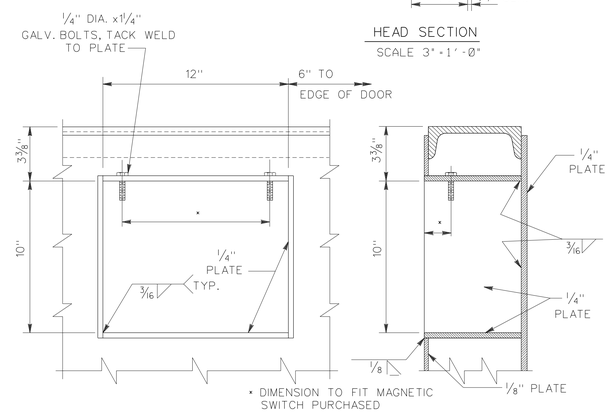

BOXOUT DETAILS
SCALE 3"=1'-0"

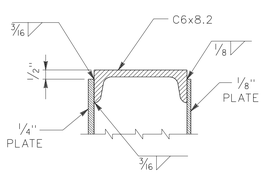

DETAIL 1
SCALE 3"=1'-0"

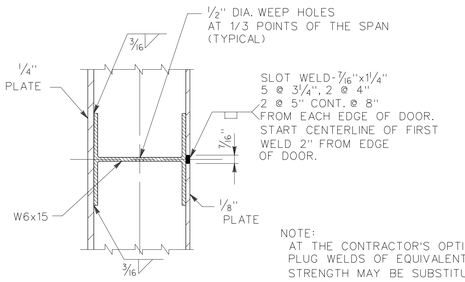

NOTE:
AT THE CONTRACTOR'S OPTION, PLUG WELDS OF EQUIVALENT STRENGTH MAY BE SUBSTITUTED FOR THE ABOVE SLOT WELDS.

DETAIL 3
SCALE 3"=1'-0"

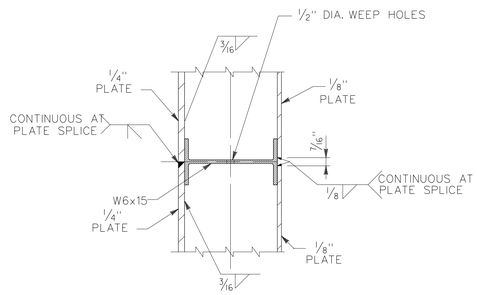

NOTE:
COVER PLATES SHALL BE SPLICED ONLY AS REQUIRED BY THE SIZE OF PLATES AVAILABLE. LOCATION OF SPLICE(S) SHALL BE DETERMINED BY THE CONTRACTOR AND THE SPLICE SHALL CONFORM TO THIS DETAIL.

COVER PLATE SPLICE DETAIL
SCALE 3"=1'-0"

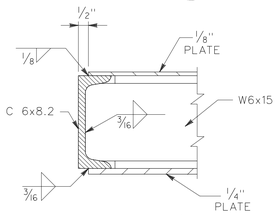

DETAIL 2
SCALE 3"=1'-0"

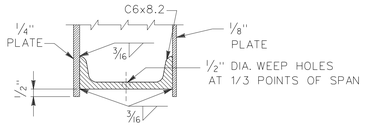

DETAIL 4
SCALE 3"=1'-0"

GRAPHIC SCALES :

¾" = 1'-0"
1" = 1'-0"
3" = 1'-0"

Symbol	Description	Date	Approved
	Revisions		

U.S. ARMY ENGINEER DIVISION, HUNTSVILLE
CORPS OF ENGINEERS
HUNTSVILLE, ALABAMA

Site adapt A/E :

US Army Corps of Engineers

MAGAZINE, STEEL
OVAL-ARCH, EARTH COVERED
8'-0" BLAST DOOR

Dwn. by: RP | Ckd. by: AF

Reviewed by :

Approved by :

Date : 30 OCT 92

Drawing code : STD 421-80-03

Sheet reference number : S-6

Design file no.: 65861

Rev.

Sheet 7 of 10

4218003S6.DGN

THIS DRAWING SUPERSEDES STD 33-15-73