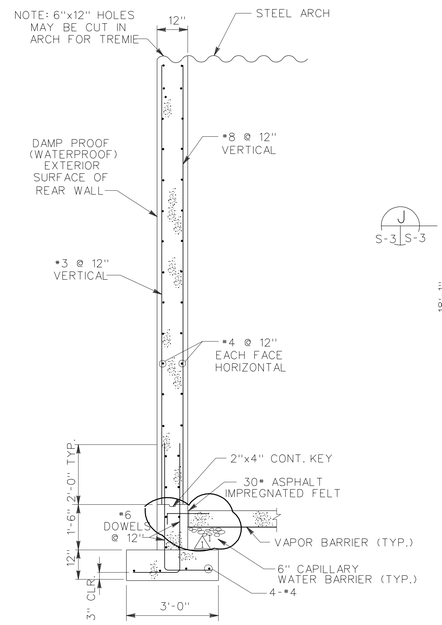

SECTION G
SCALE 1/2"=1'-0" S-1 S-3

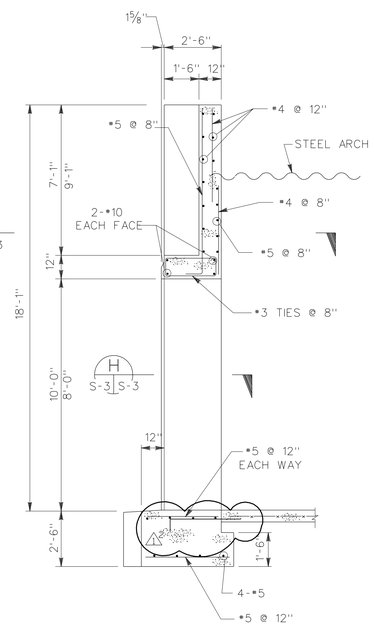

SECTION A
SCALE 3/8"=1'-0" S-2 S-3

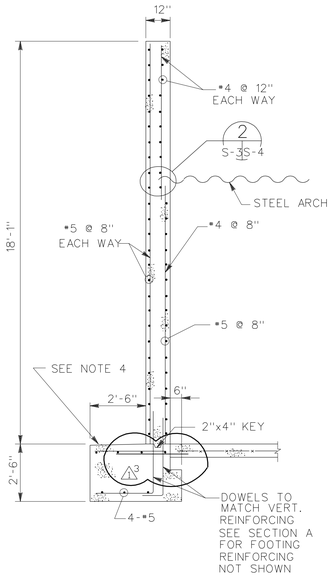

SECTION B
SCALE 3/8"=1'-0" S-2 S-3

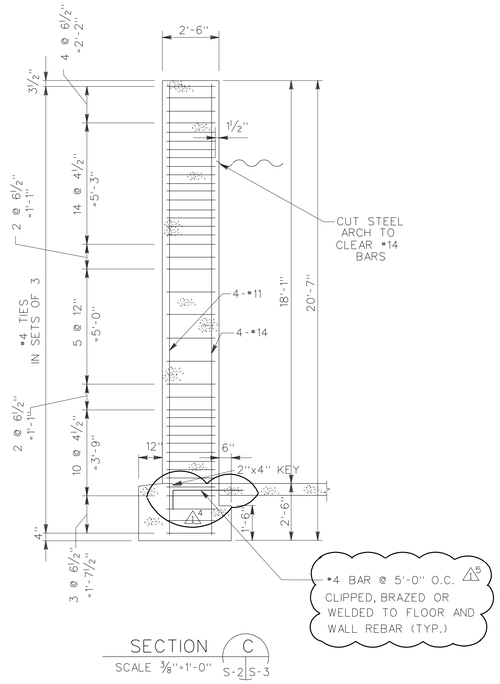

SECTION C
SCALE 3/8"=1'-0" S-2 S-3

NOTES:

1. THE SAND AND GRAVEL DRAINAGE SYSTEM SHOWN IN SECTIONS E AND F SHOULD BE TERMINATED AT THE POINT WHERE THE HEADWALL HEIGHT IS INSUFFICIENT TO MAINTAIN THE 2" IMPERVIOUS FILL MATERIAL COVER OVER AT LEAST 6" OF SAND FILTER MATERIAL. PAST THIS POINT, AN ADDITIONAL 6" OF SAND FILTER MATERIAL SHOULD BE ADDED TO "CLOSE IN" THE END OF THE GRAVEL FILTER MATERIAL.
2. TOP OF MAGAZINE PORTAL FOOTING MUST BE MAINTAINED AT FINISHED FLOOR ELEVATION FOR THE FULL 2'-6" BEYOND FACE OF PORTAL TO MAINTAIN SLIDING DOOR OPERATION. DO NOT EXTEND DOCK OR RAMP SLABS UNDER DOOR.
3. AS AN OPTION, DEPENDING ON SITE-SPECIFIC CONDITIONS, THE WEEPHOLES THROUGH THE HEADWALL, SHOWN IN SECTIONS E AND F, MAY BE REPLACED WITH PERFORATED PIPE DRAINS PLACED IN THE GRAVEL FILTER MATERIAL RUNNING LATERALLY BEHIND THE HEADWALL AND CONNECTED TO THE PERIMETER FOOTING DRAINS FOR THE IGLOOS.
4. TOP OF MAGAZINE PORTAL FOOTING TO HAVE SLOPE TO PROVIDE DRAINAGE AWAY FROM DOOR.

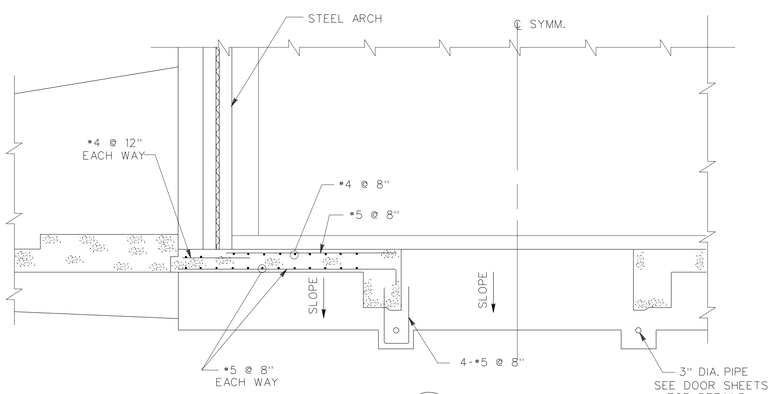

SECTION D
SCALE 3/8"=1'-0" S-2 S-3

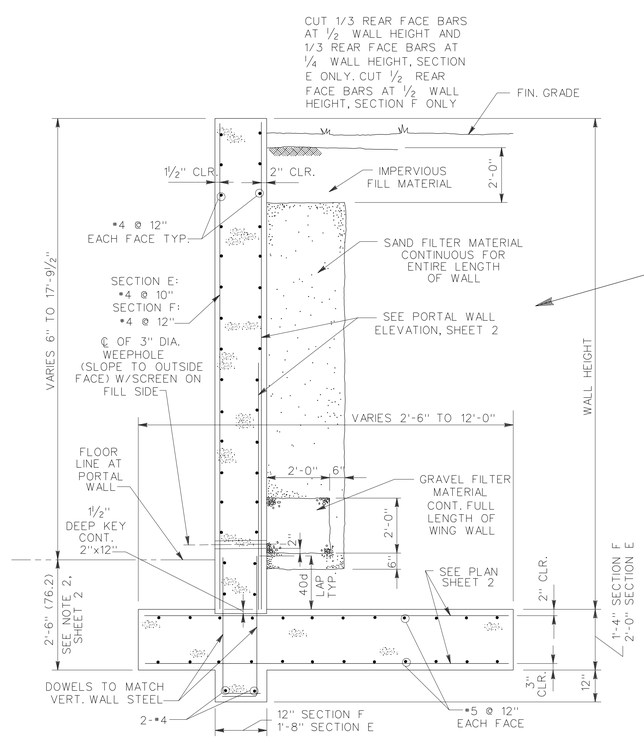

SECTION E F
SCALE 1/2"=1'-0" S-2 S-3 S-2 S-3

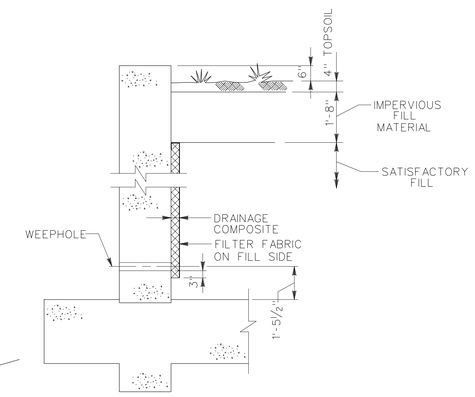

OPTIONAL DRAINAGE DETAIL
FOR SECTION E F
(SEE NOTE 5, SHEET 2)
N.T.S.
S-2 S-3 S-2 S-3

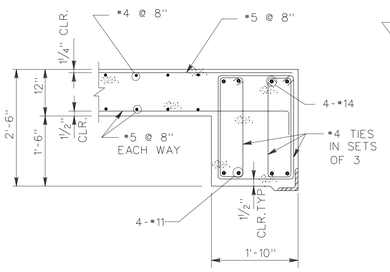

SECTION H
SCALE 3/4"=1'-0" S-3 S-3

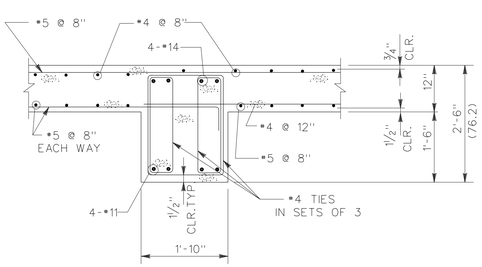

SECTION J
SCALE 3/4"=1'-0" S-3 S-3

GRAPHIC SCALES:

1/4" = 1'-0" 5' 0 5'
3/8" = 1'-0" 12" 6" 0 1' 2' 3' 4' 5' 6' 7'
3/4" = 1'-0" 12" 6" 0 1' 2' 3'
1/2" = 1'-0" 12" 6" 0 1' 2' 3' 4' 5'

Symbol	Description	Date	Approved
5	GENERAL REVISION FOR LIGHTNING PROTECTION	11JUN98	WAW

Revisions

U.S. ARMY ENGINEER DIVISION, HUNTSVILLE
CORPS OF ENGINEERS
HUNTSVILLE, ALABAMA

Site adapt A/E :

US Army Corps of Engineers

MAGAZINE, STEEL
OVAL-ARCH, EARTH COVERED
PORTAL AND REAR WALL
PLAN, ELEVATION AND SECTIONS

Dwn. by: RDP | Ckd. by: AF

Reviewed by :

Approved by :

Date : 30 OCT 92

Sheet reference number : S-3

Drawing code : STD 421-80-03

Design file no.: 65858

Rev.

Sheet 4 of 10

4218003S3.DGN

THIS DRAWING SUPERSEDES STD 33-15-73