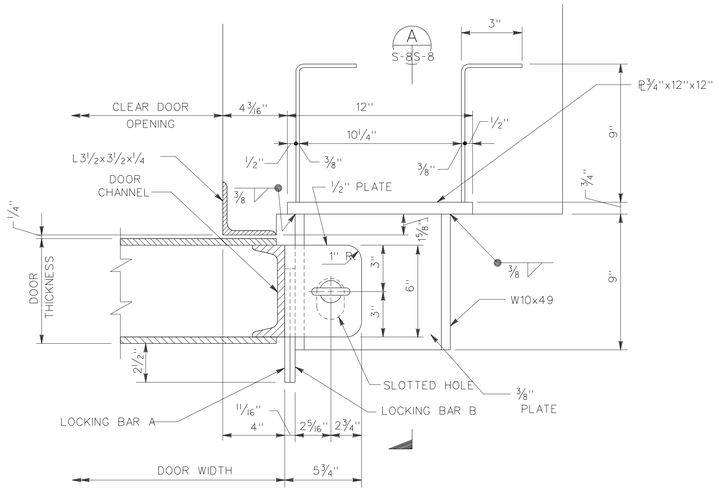

PLAN
SCALE: 3"=1'-0"

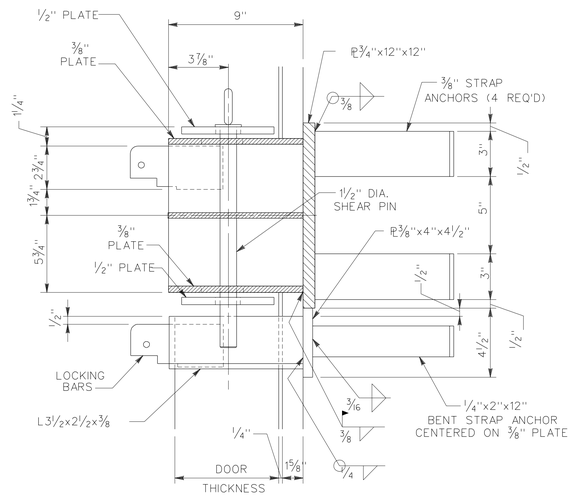

SECTION A
SCALE: 3"=1'-0" S-8 S-8

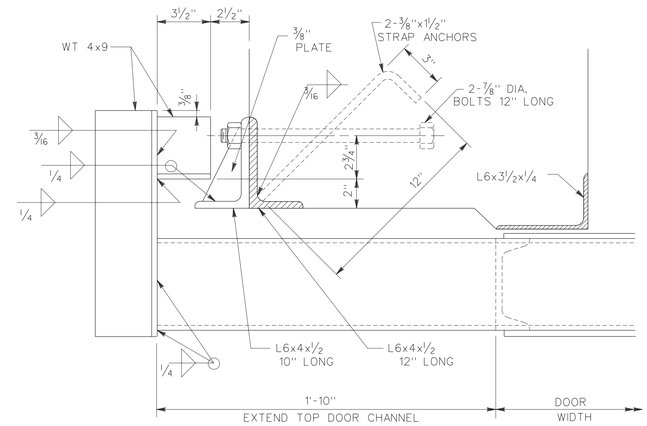

PLAN

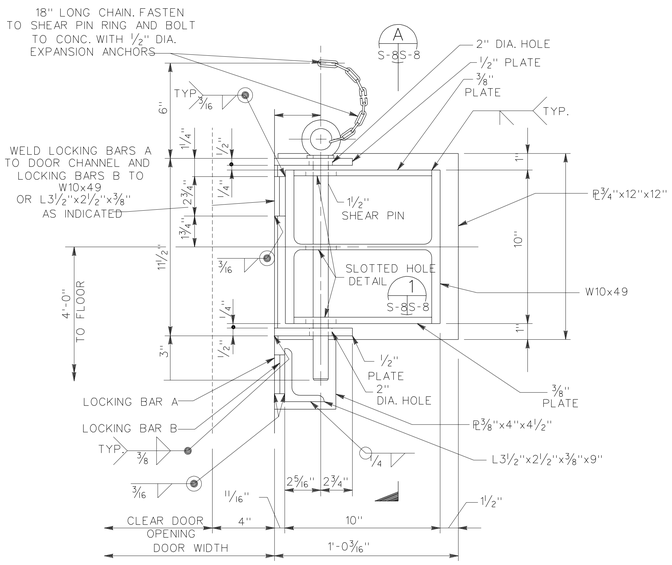

ELEVATION
SCALE: 3"=1'-0"

RESTRAINING BRACKET DETAILS

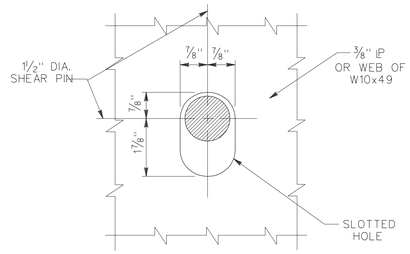

DETAIL 1
NO SCALE S-8 S-8

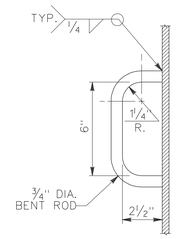

DOOR HANDLE
SCALE: 3"=1'-0"

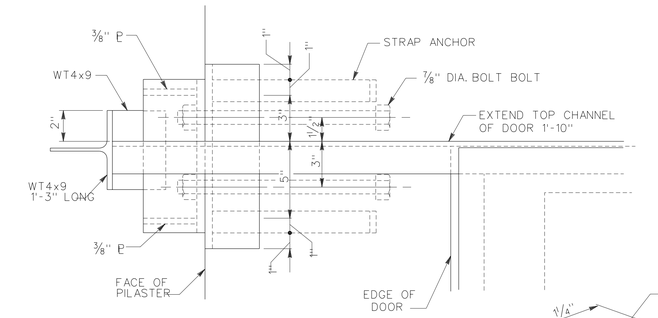

ELEVATION

DETAIL 5
SCALE: 3"=1'-0" S-6 S-7 S-8

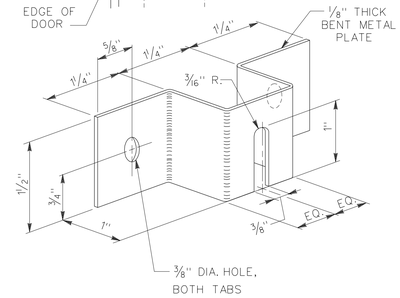

CHAIN GUIDE AND HOLDER
NO SCALE

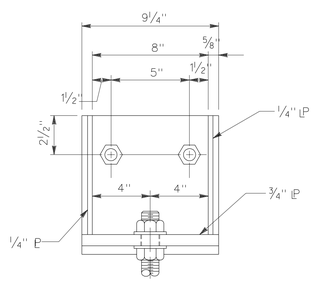

ELEVATION

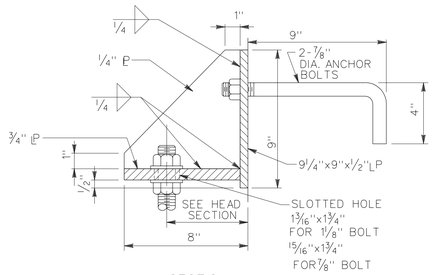

SECTION

TRACK SUPPORT BRACKET
TYPE I
SCALE: 3"=1'-0"

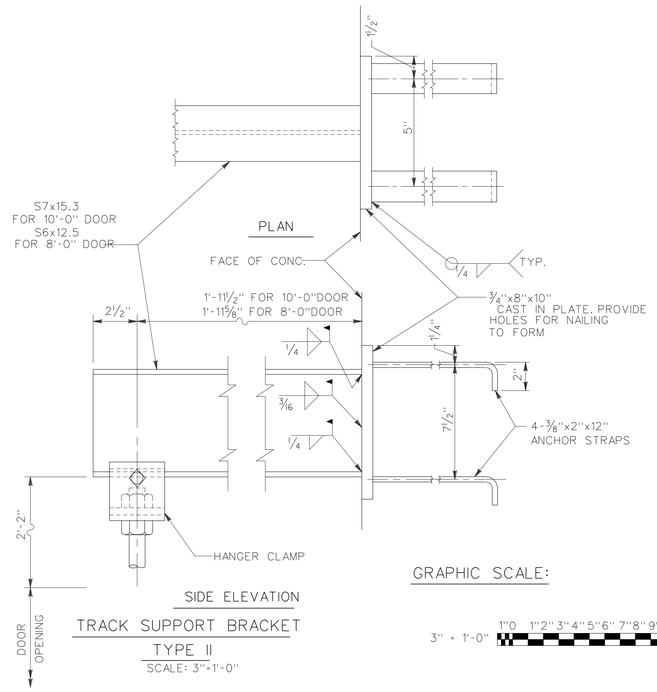

SIDE ELEVATION

TRACK SUPPORT BRACKET
TYPE II
SCALE: 3"=1'-0"

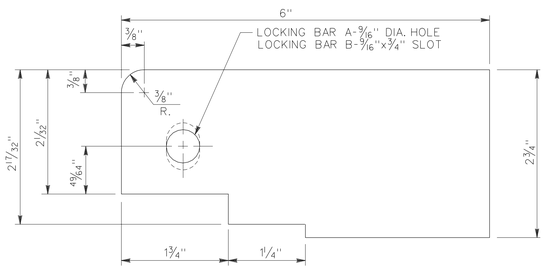

LOCKING BAR 'A'-5/16" THICK
LOCKING BAR 'B'-3/8" THICK
2 EACH REQUIRED

LOCKING BARS
NO SCALE

LOCKING BARS TO CONFORM TO MILITARY SPECIFICATION MIL-H-43905A

GRAPHIC SCALE:
3" = 1'-0" 1" 0 1" 2" 3" 4" 5" 6" 7" 8" 9" 10" 11"

Symbol	Description	Date	Approved

Revisions

U.S. ARMY ENGINEER DIVISION, HUNTSVILLE
CORPS OF ENGINEERS
HUNTSVILLE, ALABAMA

Site adapt A/E :

US Army Corps of Engineers

MAGAZINE, STEEL AND CONCRETE BOX, EARTH COVERED

BLAST DOOR DETAILS

Dwn. by: RP | Ckd. by: JMS

Reviewed by :

Approved by :

Date : 15 DEC 92

Drawing code : STD 421-80-02

Sheet reference number : S-8

Design file no.: 65828

Rev.

Sheet 9 of 11

4218002S8.DGN