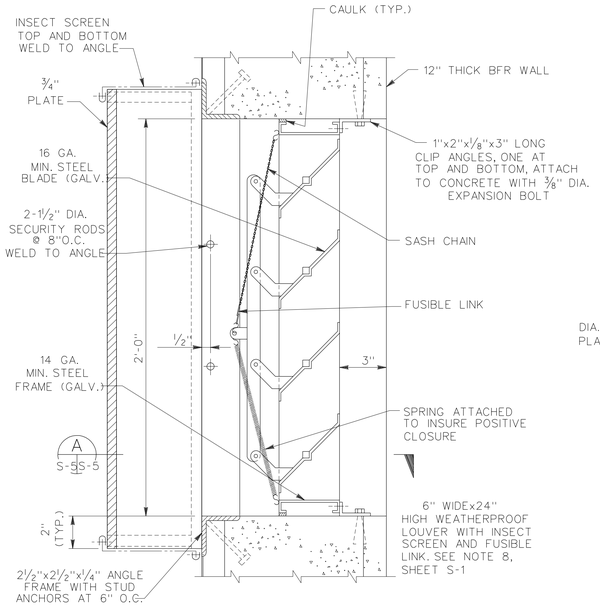

LOUVER DETAIL
SCALE 3"=1'-0"

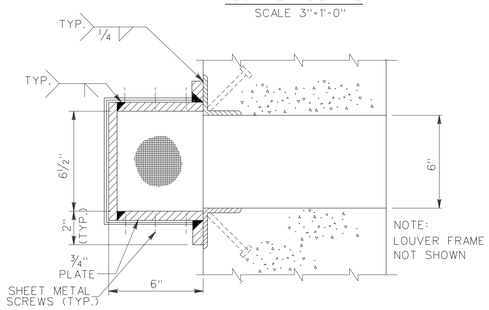

SECTION A
SCALE 3"=1'-0" S-5 S-5

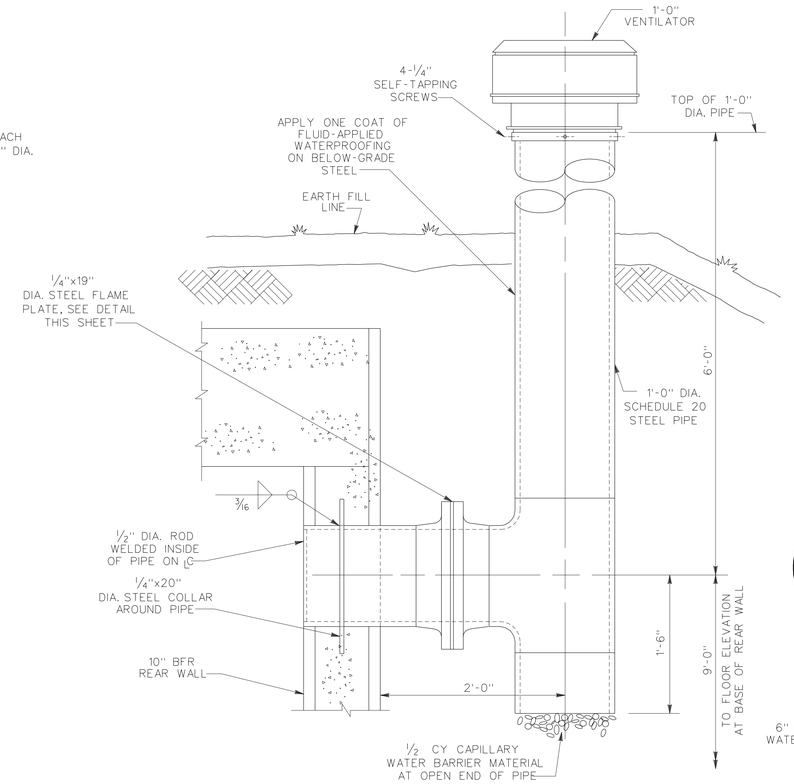

VENTILATOR DETAIL 1
SCALE 1 1/2"=1'-0" S-1 S-5

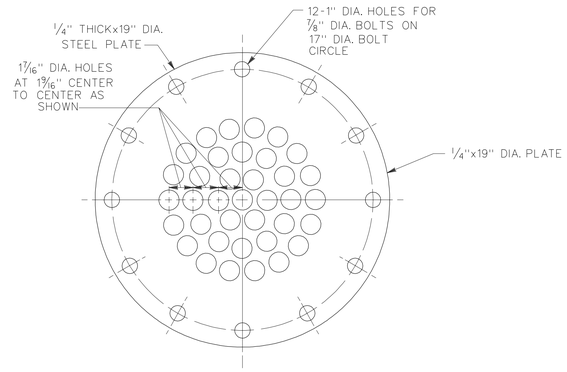

VENTILATOR FLAME PLATE DETAIL
SCALE 3"=1'-0"

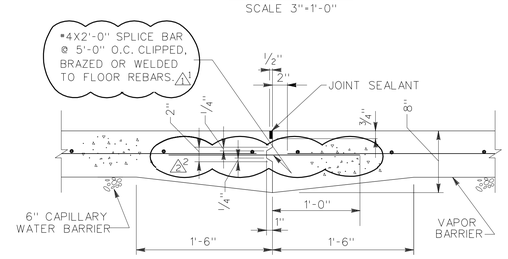

FLOOR CONSTRUCTION JOINT
SECTION F
NO SCALE S-1 S-5

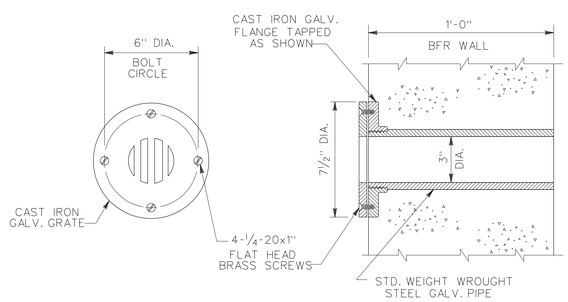

DETAIL 3
SCALE 3"=1'-0" S-2 S-5

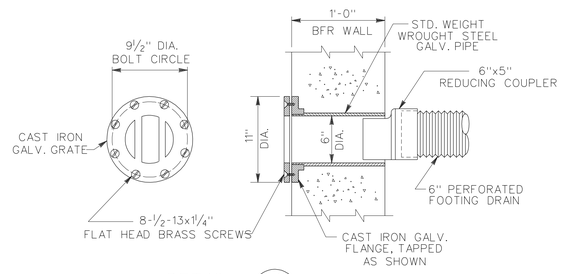

DETAIL 4
SCALE 1 1/2"=1'-0" S-2 S-5

GRAPHIC SCALES:

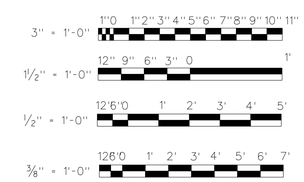

Symbol	Description	Date	Approved
1	GENERAL REVISION FOR LIGHTNING PROTECTION	11JUN98	WAW

Revisions

U.S. ARMY ENGINEER DIVISION, HUNTSVILLE
CORPS OF ENGINEERS
HUNTSVILLE, ALABAMA

Site adapt A/E :

US Army Corps of Engineers

MAGAZINE, STEEL AND CONCRETE BOX, EARTH COVERED

MISC. DETAILS AND SECTIONS

Dwn. by: RP | Ckd. by: JMS

Reviewed by :

Approved by :

Date : 15 DEC 92

Drawing code : STD 421-80-02

Sheet reference number : S-5

Design file no.: 65825

Rev.

Sheet 6 of 11

4218002S5.DGN: