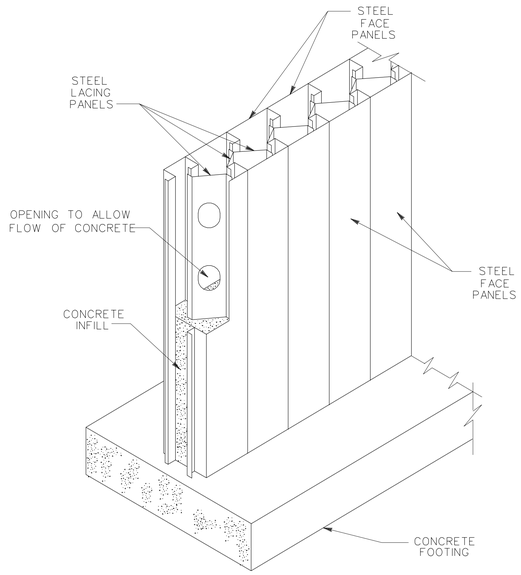

TYPICAL BFR WALL ASSEMBLY

NO SCALE

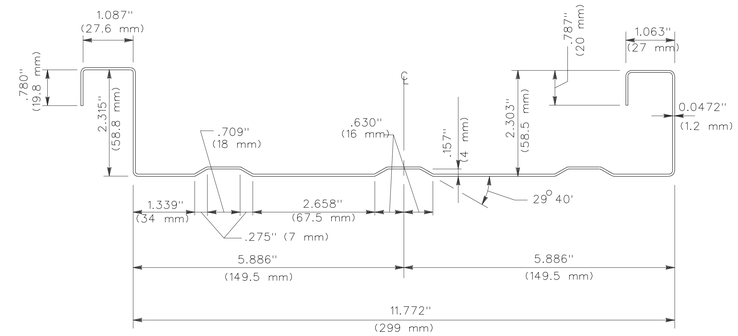

12" BFR WALL FACE PANEL

SCALE: ¾

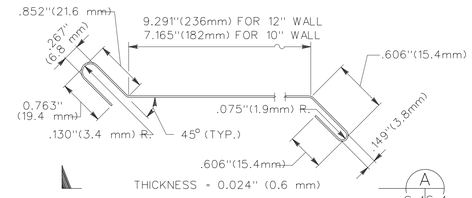

TYPICAL BFR LACING PANEL

FULL SCALE

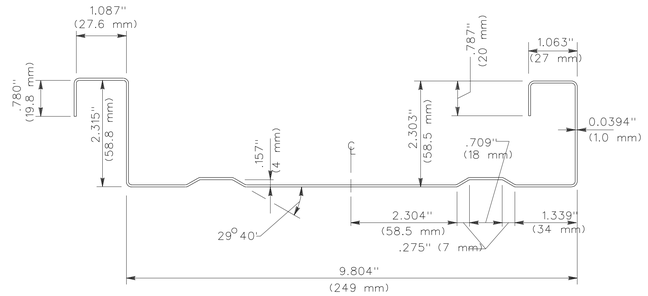

10" BFR WALL FACE PANEL

SCALE: ¾

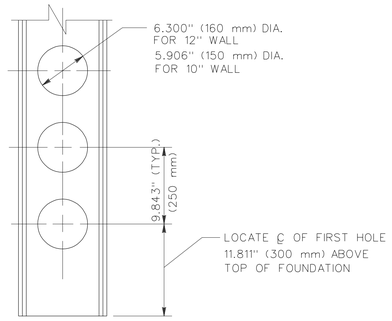

SECTION A

N.T.S. S-4 S-4

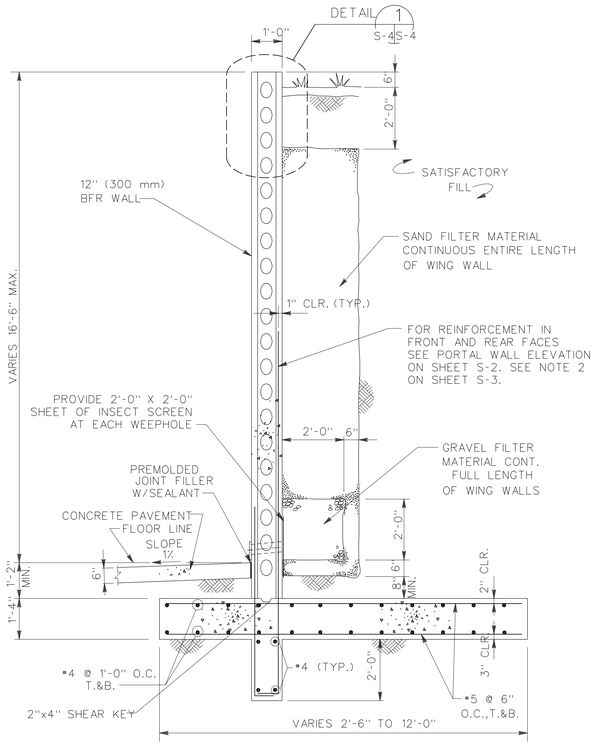

DRAINAGE SYSTEM

AT WING WALLS

SCALE ½"=1'-0"

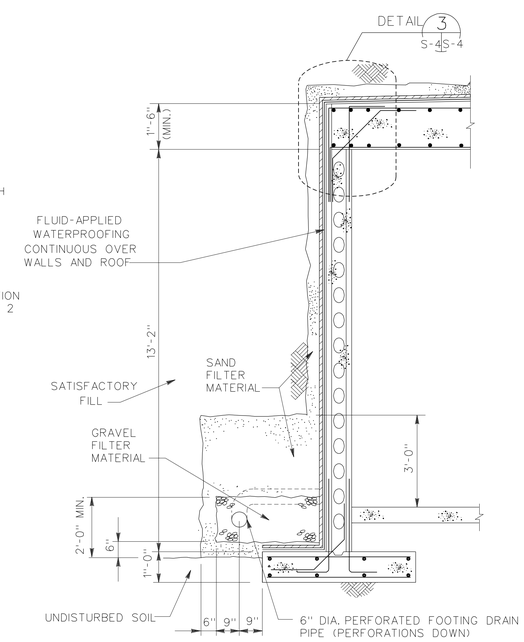

DRAINAGE SYSTEM

AROUND MAGAZINE SIDE

AND REAR WALLS

SCALE ½"=1'-0"

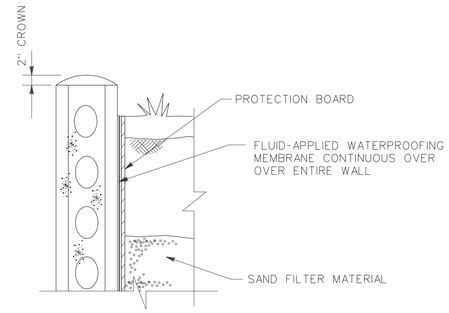

DETAIL 1

SCALE 1"=1'-0" S-4 S-4

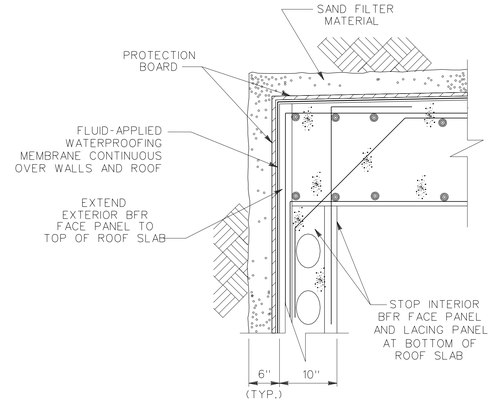

DETAIL 3

SCALE 1"=1'-0" S-4 S-4

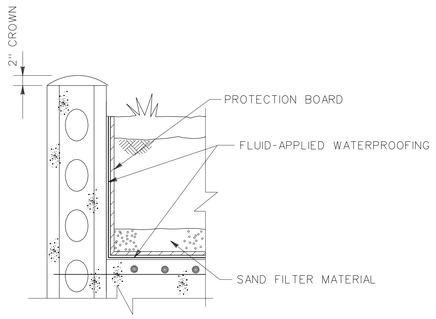

DETAIL 2A

SCALE 1"=1'-0" S-3 S-4

ALTERNATE DRAINAGE SYSTEM

GRAPHIC SCALES :

½" = 1'-0" 12' 6' 0 1' 2' 3' 4' 5'

¾" = 1'-0" 12" 6" 0 1' 2' 3'

Symbol	Description	Date	Approved
	Revisions		

U.S. ARMY ENGINEER DIVISION, HUNTSVILLE
CORPS OF ENGINEERS
HUNTSVILLE, ALABAMA

Site adapt A/E :

US Army Corps of Engineers

MAGAZINE, STEEL AND CONCRETE BOX, EARTH COVERED

SECTIONS AND DETAILS

Dwn. by: RDP | Ckd. by: JMS

Reviewed by :

Approved by :

Date : 15 DEC 92

Drawing code : STD 421-80-02

Sheet reference number : S-4

Design file no.: 65824

Rev.

Sheet 5 of 11

4218002S4.DGN