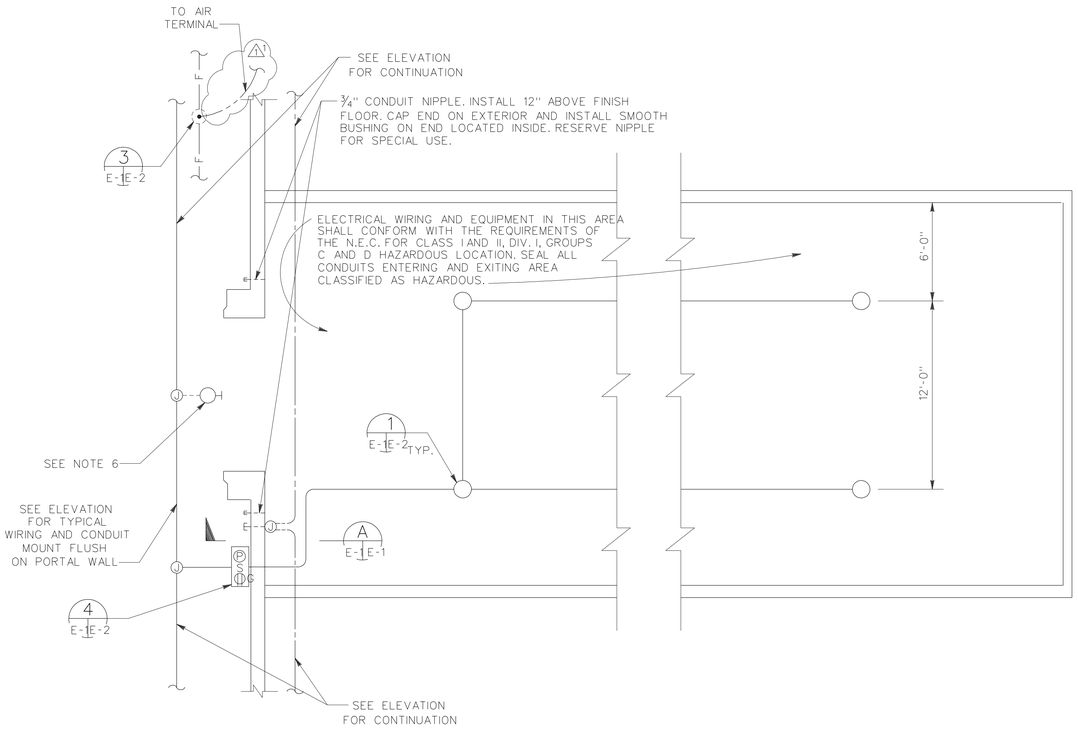

PLAN

SCALE: 1/4"=1'-0"

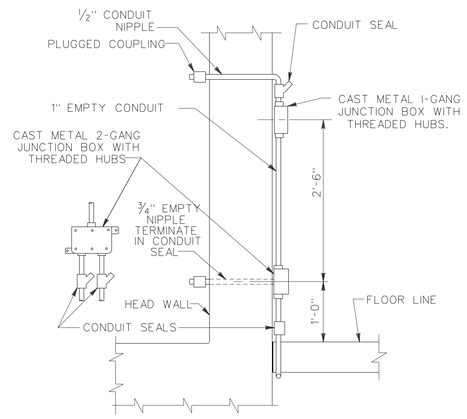

SECTION A E-1 E-1

SCALE 1"=1'-0"

LEGEND (FOR SHEETS E-1 AND E-2)

- WALL MOUNTED LIGHTING FIXTURE. SEE NOTE 6.
- CEILING MOUNTED LIGHTING FIXTURE. SEE DETAIL 1 E-1 E-2
- 3-GANG OUTLET BOX WITH SINGLE GANG COVER FOR PILOT LAMP, SINGLE POLE SWITCH AND DUPLEX CONVENIENCE OUTLET WITH GROUND FAULT INTERRUPTER ALL SUITABLE FOR USE OUTDOORS.
- JUNCTION BOX, CAST METAL WITH THREADED WALLS OR HUBS.
- CONDUIT RUN CONCEALED BELOW GRADE OR FLOOR SLAB. NOTE: ANY CONDUIT RUN NOT OTHERWISE INDICATED SHALL BE 1/2" AND CONTAIN THREE NO. 12 AWG. WIRES. A GREATER NUMBER OF WIRES ARE SHOWN WITH CROSS LINES AS FOLLOWS: GROUND CONDUCTOR
  THE LONG CROSS LINE INDICATES THE IDENTIFIED GROUNDED NEUTRAL CONDUCTOR AND THE SHORT CROSS LINES INDICATES THE PHASE CONDUCTORS. UNLESS OTHERWISE INDICATED, ALL CONDUCTORS ARE NO. 12 AWG (3.3SQ.MM)
- CONDUIT RUN INSTALLED EXPOSED ON WALLS OR CEILING. WIRING SHALL BE SAME AS IN NOTE FOR CONCEALED COINDUIT RUN.
- AUXILIARY EMPTY CONDUIT RUN CONCEALED BELOW GRADE OR FLOOR SLAB SIZED AS INDICATED.
- CONDUIT TERMINATED WITH A PLUGGED COUPLING.
- VALVE TYPE SECONDARY SURGE ARRESTER (L.A.)
- LIGHTNING AIR TERMINAL. EXTEND 4'-0" ABOVE PROTECTED OBJECT.
- GROUND ROD
- —F— FACILITY COUNTERPOISE SYSTEM, NO. 1/0 AWG. BARE COPPER WIRE. RUN 2-6" BELOW GRADE.
- DOWN CONDUCTOR FROM AIR TERMINAL, NO. 2 AWG. BARE COPPER WIRE.

NOTES: (FOR SHEETS E-1 AND E-2)

1. HOLES SHALL NOT BE MADE IN CONCRETE ROOFING FOR INSTALLLATION OF ELECTRICAL WORK.
2. THE CONDUIT SYSTEM ON THE FRONT OF STRUCTURE IS TO HAVE SUPPORTS SPACED NOT MORE THAN 8'-0". SUPPORTS ON EACH SIDE OF CONSTRUCTION JOINTS SHALL NOT EXCEED 5'-0".
3. RUNNING THREAD COUPLING CONNECTIONS ARE NOT PERMITTED FOR THE RIGID CONDUIT SYSTEMS.
4. FOR THE 120/240 VOLT, SINGLE PHASE, 3-WIRE SERVICE, INSTALL A 1 1/2" EMPTY CONDUIT 2'-0" BELOW FINISHED GRADE AND TERMINATE WITH A PLUGGED COUPLING NOT LESS THAN 5'-0" BEYOND PAVED AREA.
5. FOR THE INSTALLATION BY OTHERS OF A TELEPHONE TYPE CABLE, INSTALL 2 1 1/2" CONDUITS WITH PULL WIRE, 2'-0" BELOW FINISHED GRADE AND TERMINATE WITH A PLUGGED COUPLING NOT LESS THAN 5'-0" BEYOND PAVED AREA. (3)
6. THE LIGHTING FIXTURE SHOULD BE INCANDESCENT TYPE. ALL EXTERIOR LIGHTS SHALL BE CONNECTED ON THE SAME CIRCUIT TO FACILITATE CONTROL AT THE PANEL BOARD. HOWEVER, NOT MORE THAN EIGHT FIXTURES SHALL BE CONNECTED TO ANY ONE 20 AMP CIRCUIT.
7. THE NUMBER OF INTERIOR LIGHTING FIXTURES VARIES, DEPENDING ON INTERNAL LENGTH OF MAGAZINE, AS FOLLOWS:

LENGTH OF MAGAZINE	NO. OF FIXTURES
20'-24'	4
25'-36'	4
37'-48'	4
49'-60'	6
61'-89'	8

8. INSTALL AN INTERMEDIATE AIR TERMINAL ANCHORED TO STRUCTURE ROOF OVER STRUCTURE WHERE INTERIOR LENGTH OF MAGAZINE EXCEEDS 37 FEET. SPACING BETWEEN 4 FEET AIR TERMINALS SHALL NOT EXCEED 37 FEET. (SEE SHEET E-2.)
9. STEEL PANELS SHALL BE BONDED TO REINFORCING STEEL EVERY 20 FEET AND AT EACH CORNER. OPTIONAL EQUIPMENT SUCH AS LOUVERS SHALL BE GROUNDED TO THE STEEL PANELS.

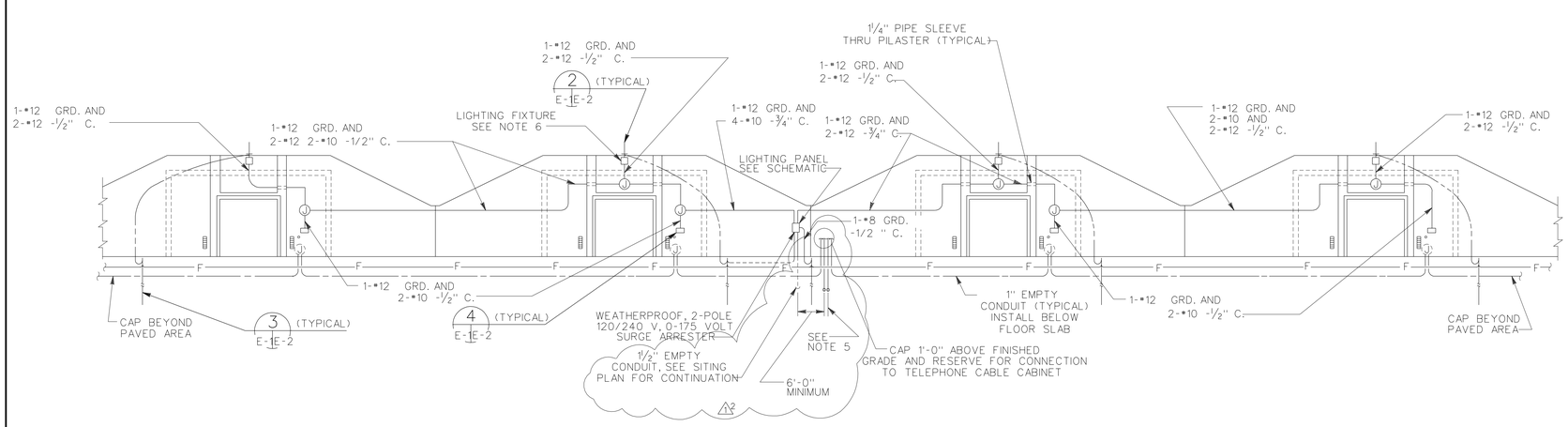

ELEVATION

NOT TO SCALE

GRAPHIC SCALE

1/4" = 1'-0" 5' 0 5'

Symbol	Description	Date	Approved
3	GENERAL REVISION/LIGHTNING PROTECTION	11JUN98	WLS

Revisions

U.S. ARMY ENGINEER DIVISION, HUNTSVILLE
CORPS OF ENGINEERS
HUNTSVILLE, ALABAMA

Site adapt A/E :

US Army Corps of Engineers

MAGAZINE, STEEL AND CONCRETE BOX, EARTH COVERED

ELECTRICAL PLAN AND SECTIONS

Dwn. by: MLY | Ckd. by: FH

Reviewed by :

Approved by :

Date : 15 DEC 92

Drawing code : STD 421-80-02

Sheet reference number : E-1

Design file no.: 65829

Rev.

Sheet 10 of 11

4218002E1.DGN