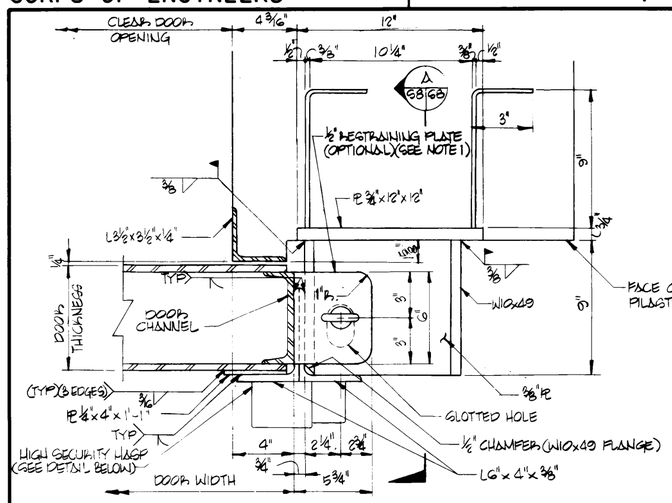

PLAN
SCALE 3"=1'-0"

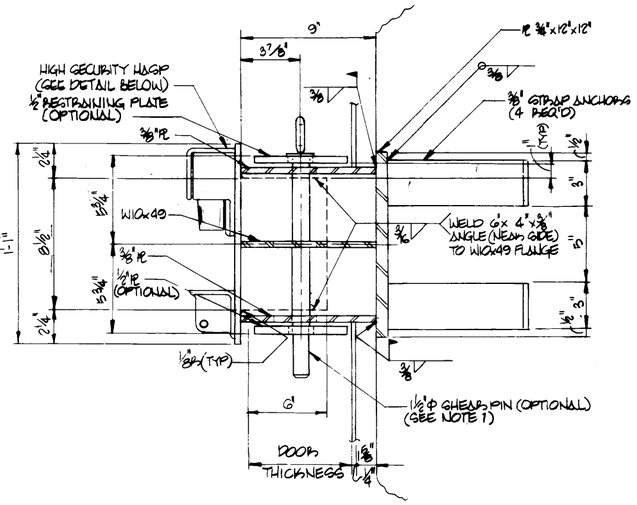

SECTION
SCALE 3"=1'-0"

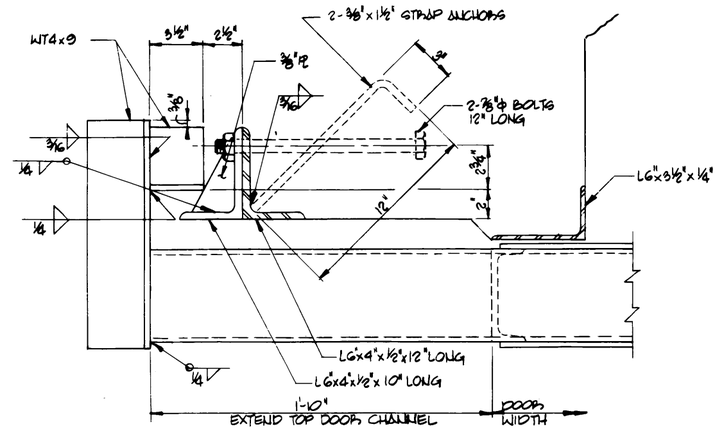

PLAN
SCALE 3"=1'-0"

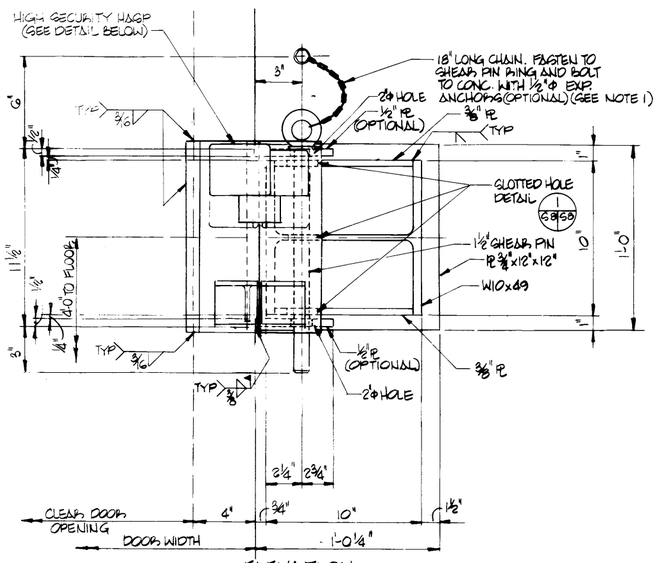

ELEVATION
SCALE 3"=1'-0"

RESTRAINING BRACKET DETAILS

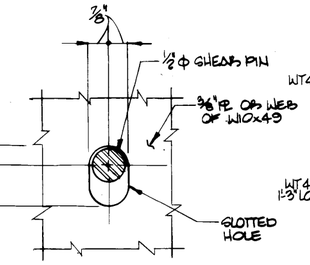

DETAIL 1 (OPTIONAL SEE NOTE 1)
NO SCALE

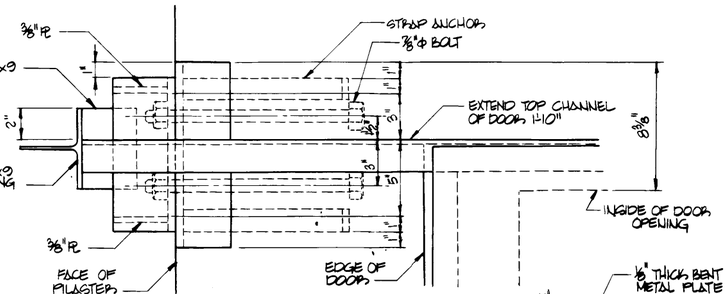

ELEVATION
DETAIL 5
SCALE 3"=1'-0"

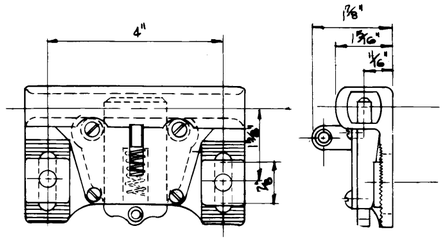

DETAIL 7
NO SCALE
EMERGENCY DOOR RELEASE

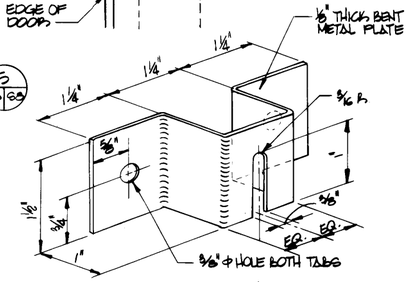

CHAIN GUIDE AND HOLDER
NO SCALE

NOTE:

1. THE USE OF THE SHEAR PIN AND RESTRAINING PLATES SHOWN ON THE RESTRAINING BRACKET DETAILS IS OPTIONAL. THEIR INCLUSION WILL BE AT THE DISCRETION OF THE SITE ADAPT ENGINEERS.

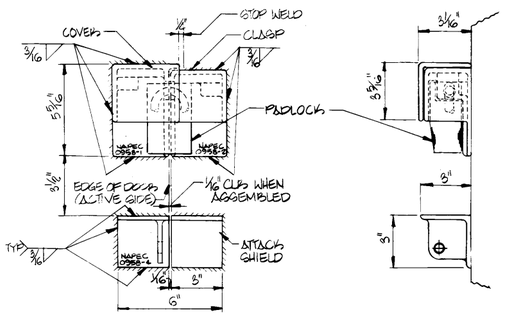

HIGH SECURITY HASP
NO SCALE
HIGH SECURITY HASP SHALL CONFORM TO MILITARY SPECIFICATION MIL-H-29181. A 1-1/2 PIECE HIGH SECURITY HASP WITH AN INTEGRAL ATTACK SHIELD MAY BE USED.

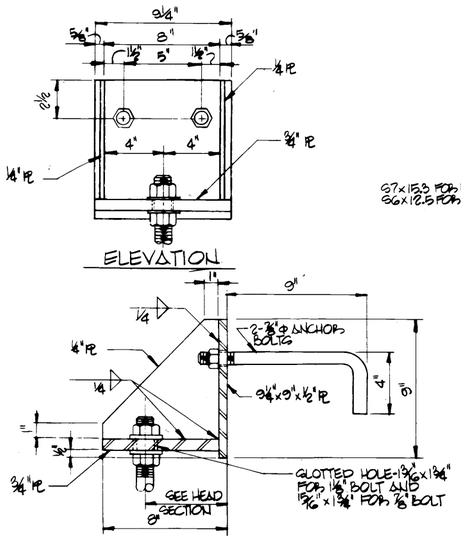

ELEVATION

SECTION
TRACK SUPPORT BRACKET
TYPE I
SCALE 3"=1'-0"

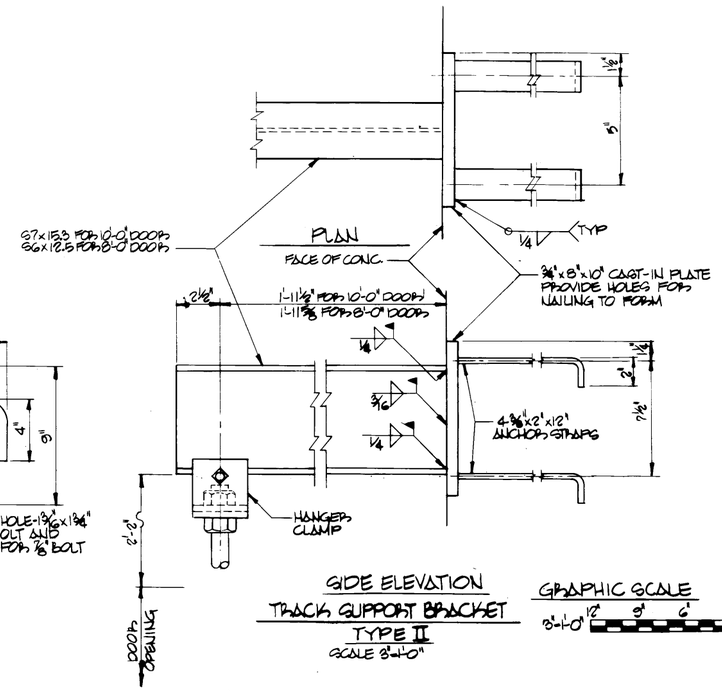

SIDE ELEVATION
TRACK SUPPORT BRACKET
TYPE II
SCALE 3"=1'-0"

GRAPHIC SCALE
3'-1'-0" 12" 9" 6" 3" 0

Symbol	Description	Date	Approved
	Revisions		

U.S. ARMY ENGINEER DIVISION, HUNTSVILLE
CORPS OF ENGINEERS
HUNTSVILLE, ALABAMA

Site adapt A/E :

US Army Corps of Engineers

MAGAZINE, STEEL
SEMICIRCULAR-ARCH, EARTH-COVERED
MISCELLANEOUS BLAST DOOR DETAILS

Dwn. by : RDP | Ckd. by : CMB

Reviewed by : Earl H. Williams

Approved by : Ronald R. Eyi

Date :

Drawing code : STD 421-80-01

Sheet reference number : S-8

Design file no. : 30095

Rev.

Sheet 9 of 11