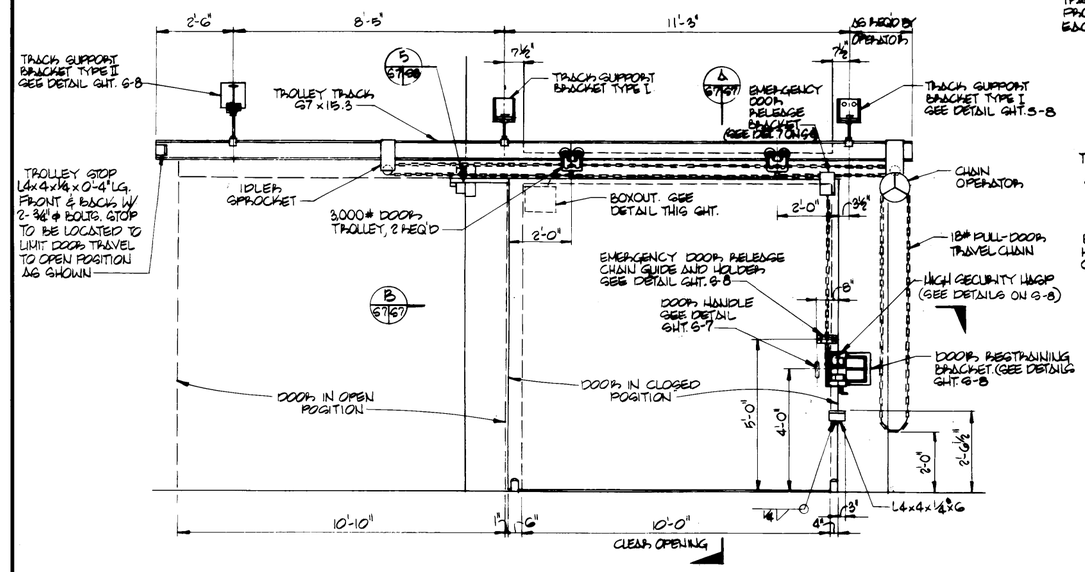

ELEVATION
SCALE 1/2" = 1'-0"

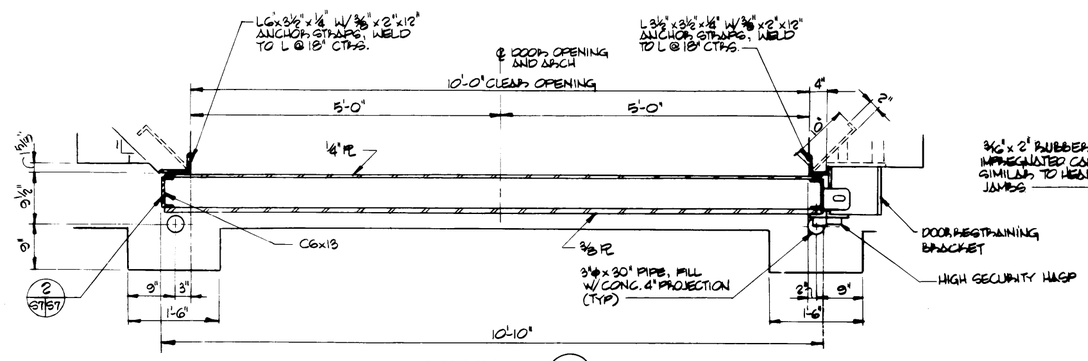

SECTION
SCALE 1" = 1'-0"

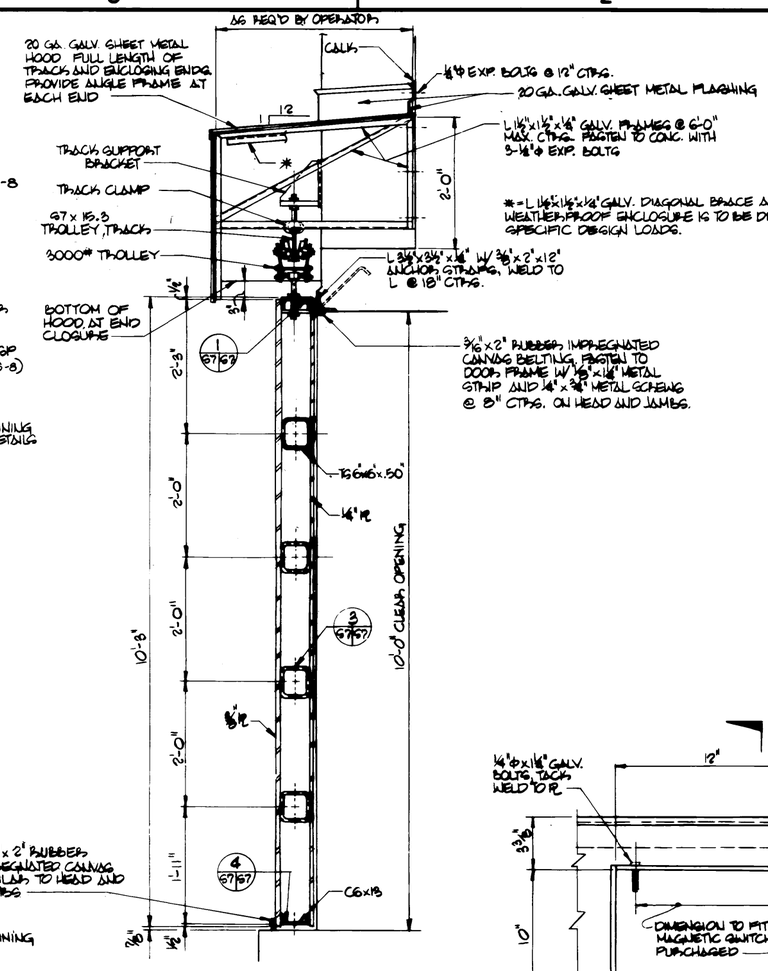

SECTION
SCALE 1" = 1'-0"

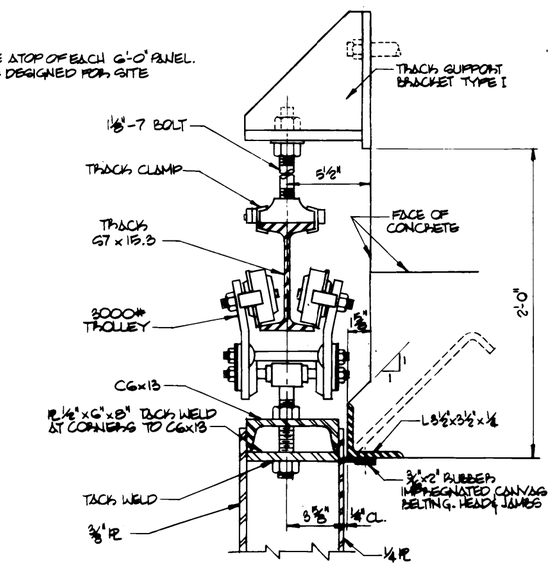

HEAD SECTION
SCALE 3" = 1'-0"

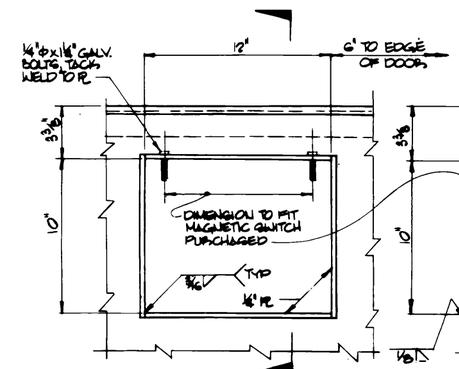

INSIDE ELEVATION

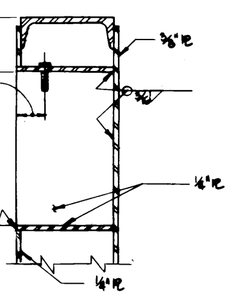

SECTION

BOXOUT DETAILS
SCALE 3" = 1'-0"

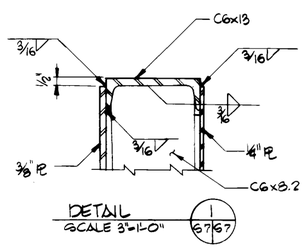

DETAIL
SCALE 3" = 1'-0"

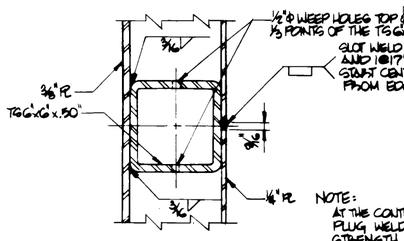

NOTE:
AT THE CONTRACTOR'S OPTION, PLUG WELDS OF EQUIVALENT STRENGTH MAY BE SUBSTITUTED FOR THE ABOVE SLOT WELDS

DETAIL
SCALE 3" = 1'-0"

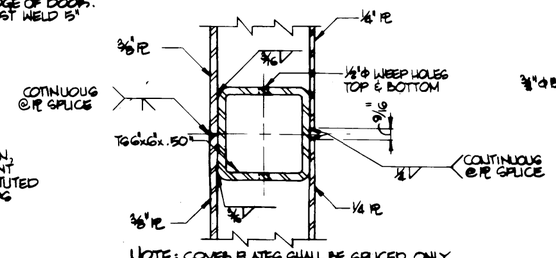

NOTE: COVER PLATES SHALL BE SPLICED ONLY AS REQ'D BY THE SIZE OF PLATES AVAILABLE. LOCATION OF SPLICES SHALL BE DETERMINED BY THE CONTRACTOR AND THE SPLICE SHALL CONFORM TO THIS DETAIL.

COVER PLATE SPLICE DETAIL
SCALE 3" = 1'-0"

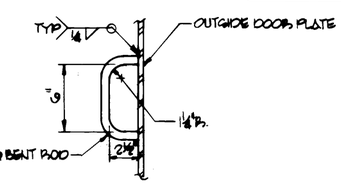

DOOR HANDLE
NO SCALE

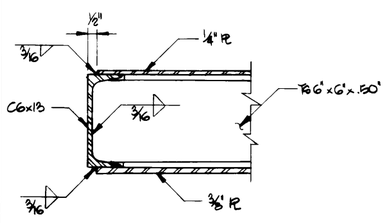

DETAIL
SCALE 3" = 1'-0"

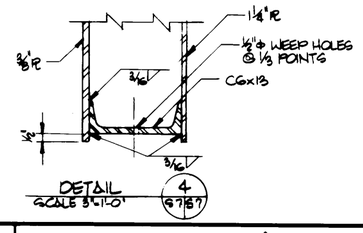

DETAIL
SCALE 3" = 1'-0"

GRAPHIC SCALES:

1/2" = 1'-0"
1" = 1'-0"
3" = 1'-0"

Symbol	Description	Date	Approved
	Revisions		

U.S. ARMY ENGINEER DIVISION, HUNTSVILLE
CORPS OF ENGINEERS
HUNTSVILLE, ALABAMA

Site adapt A/E :

US Army Corps of Engineers

MAGAZINE, STEEL SEMICIRCULAR-ARCH, EARTH-COVERED

10'-0" BLAST DOOR

Dwn. by : RDP	Ckd. by : CMB		
Reviewed by :	Date :	Sheet reference number : S-7	Design file no. : 30082 Rev.
Approved by :	Drawing code : STD 421-80-01		Sheet 8 of 11