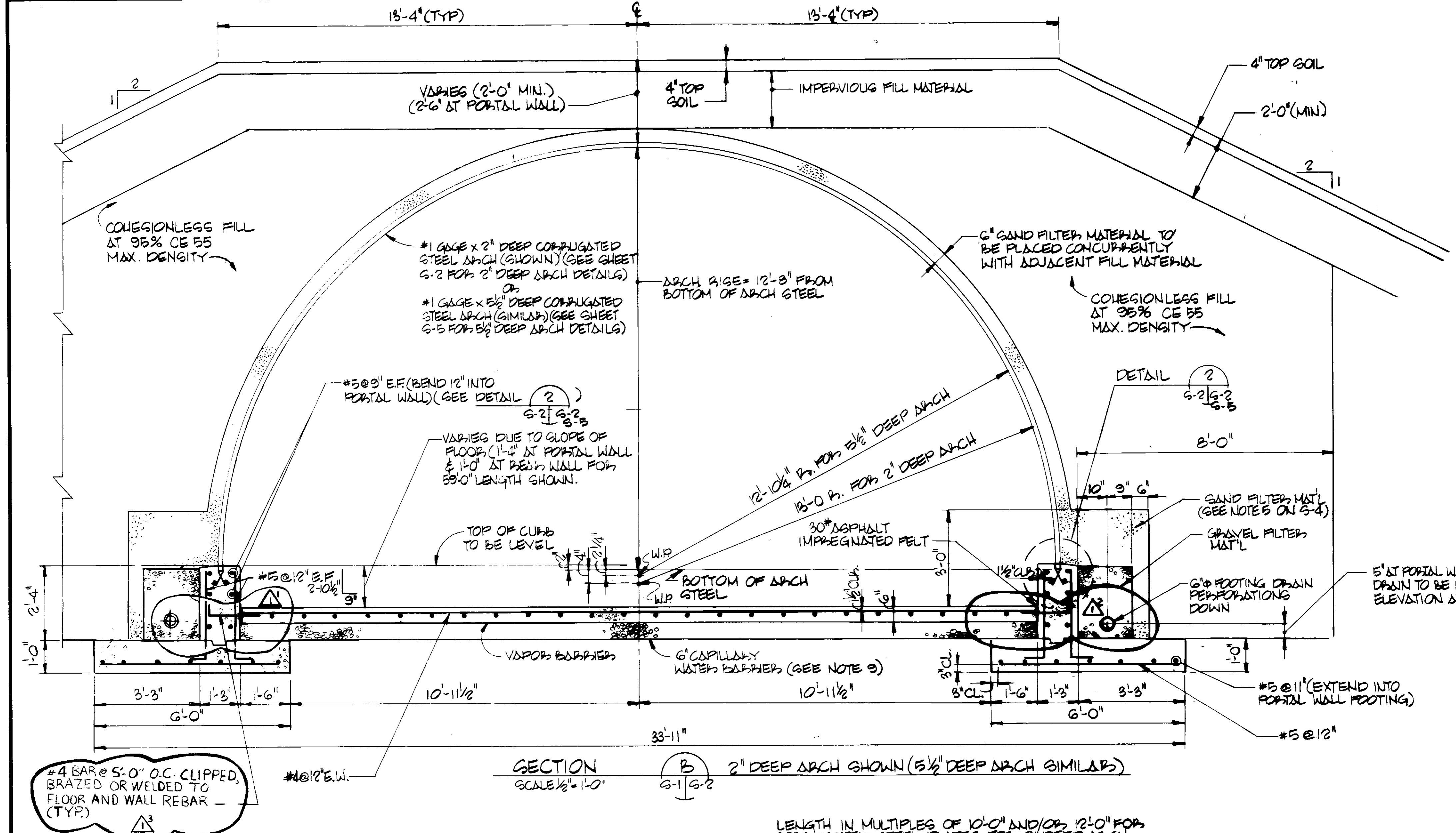

SECTION B (G-1 | S-2) 2" DEEP ARCH SHOWN (5½" DEEP ARCH SIMILAR)
SCALE ½"=1'-0"

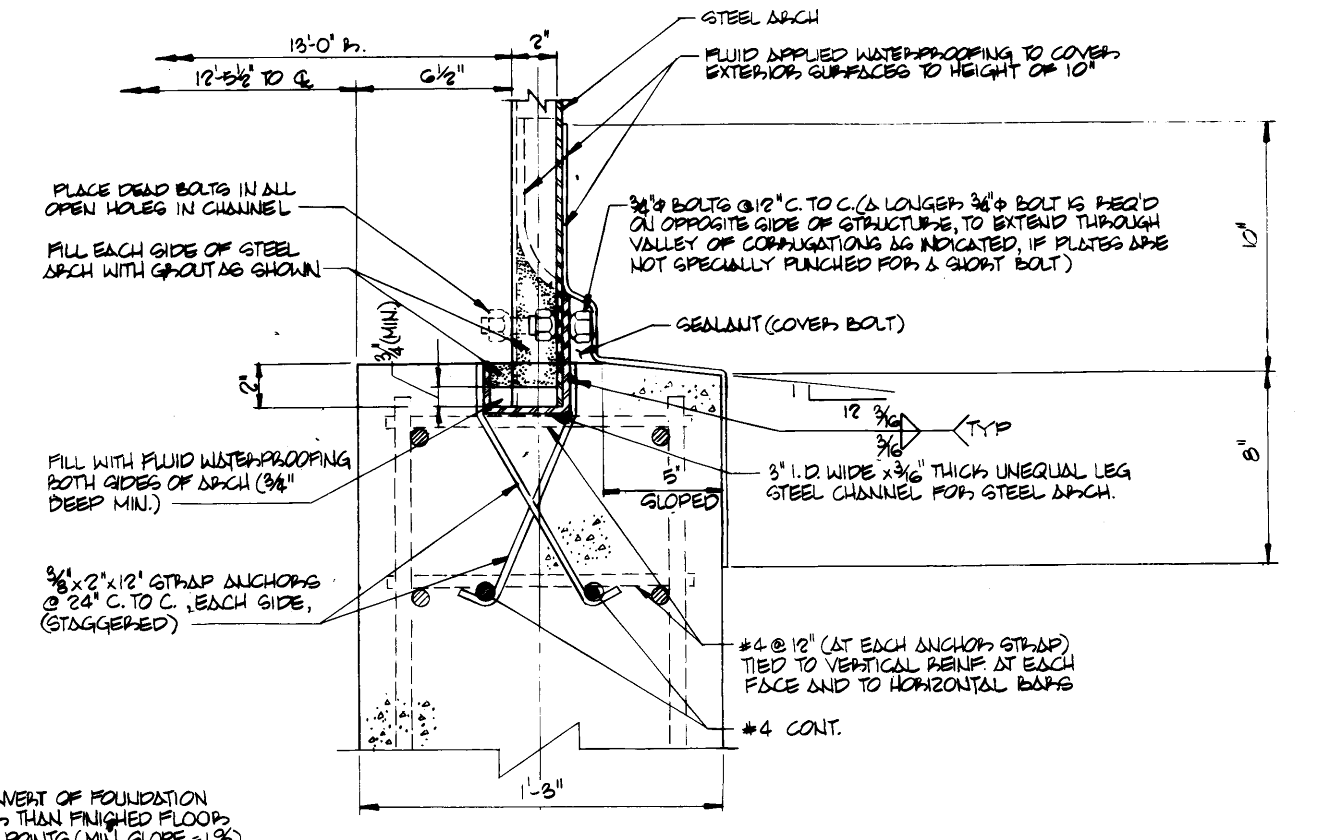

DETAIL 2 (S-2 | S-2) (2" DEEP ARCH ONLY)
SCALE 3"=1'-0"

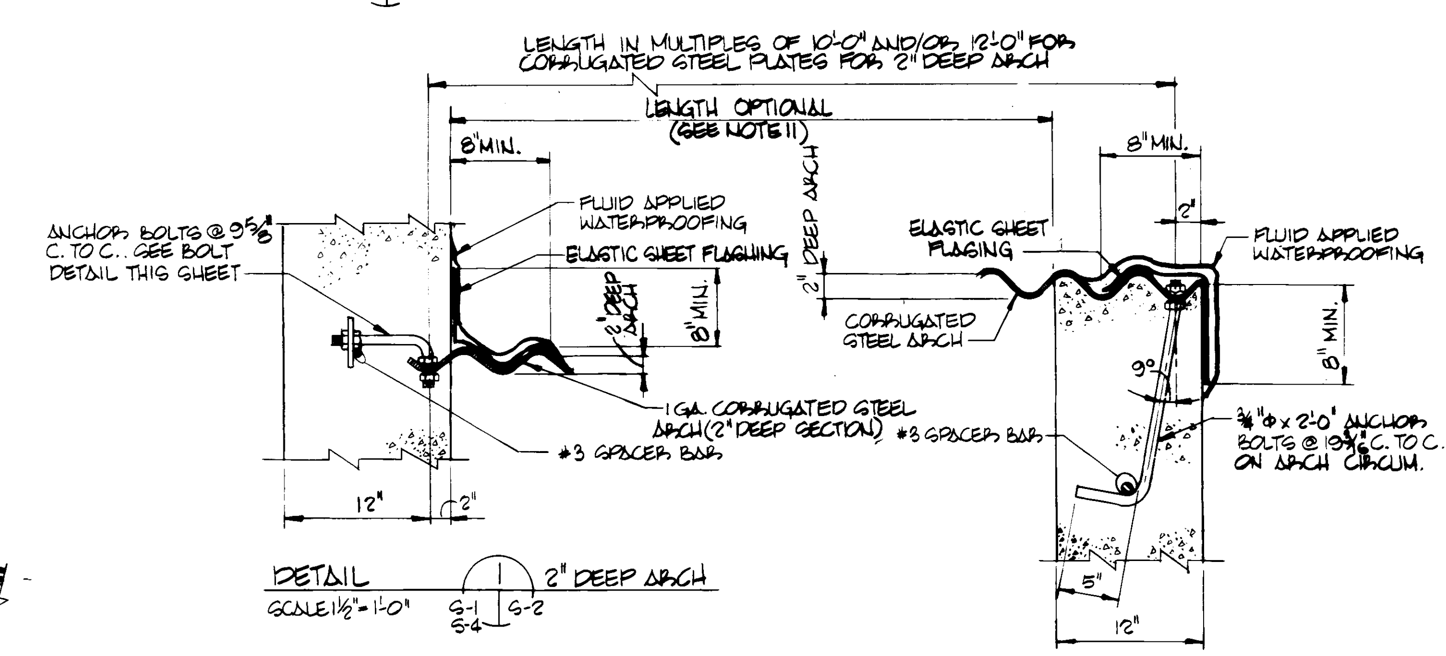

DETAIL 1 (S-1, S-4 | S-2) 2" DEEP ARCH
SCALE 1½"=1'-0"

SECTION D (S-2 | S-2) (2" DEEP ARCH)
SCALE 1½"=1'-0"

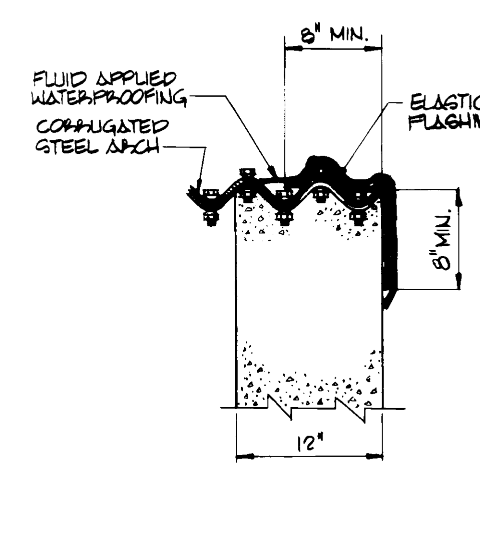

SECTION E (S-2 | S-2) (2" DEEP ARCH)
SCALE 1½"=1'-0"

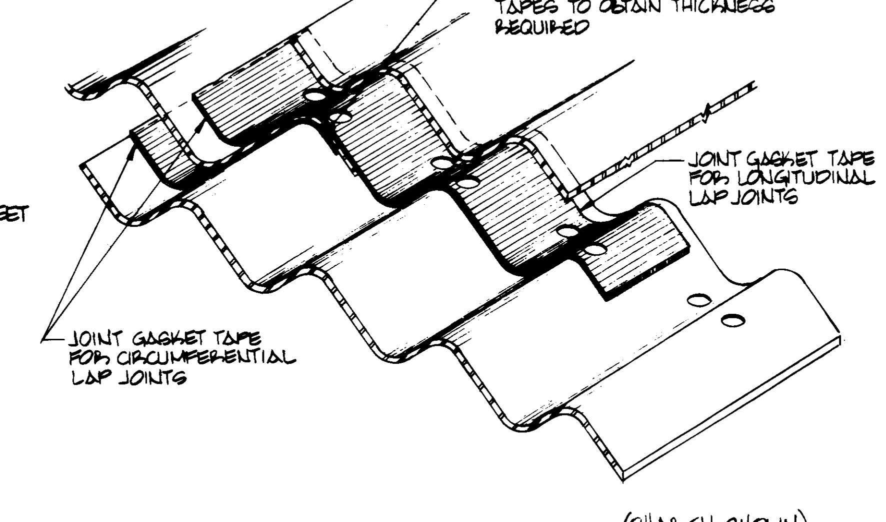

JOINT TAPE INSTALLATION DETAIL (2" ARCH SHOWN) (2 BOLT ROWS, STAGGERED) (5½" ARCH SIMILAR) (3 BOLT ROWS, IN-LINE)
NO SCALE

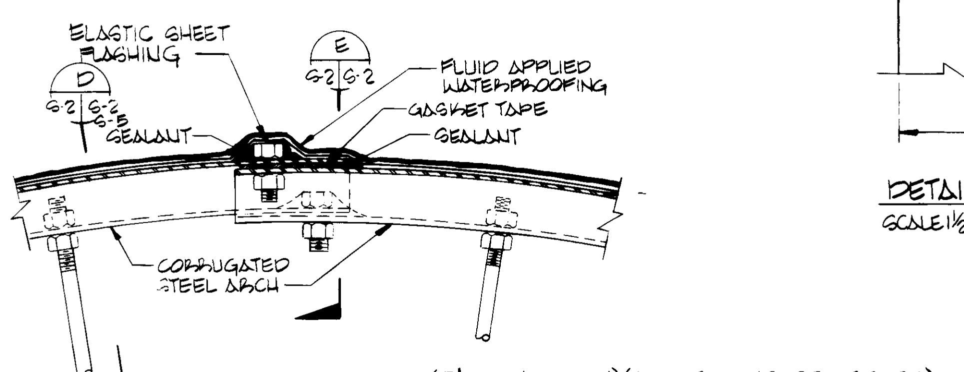

SECTION C (S-1 | S-2) (2" ARCH SHOWN)(2 BOLT ROWS STAGGERED) (5½" ARCH SIMILAR)(3 BOLT ROWS, IN-LINE)
NO SCALE

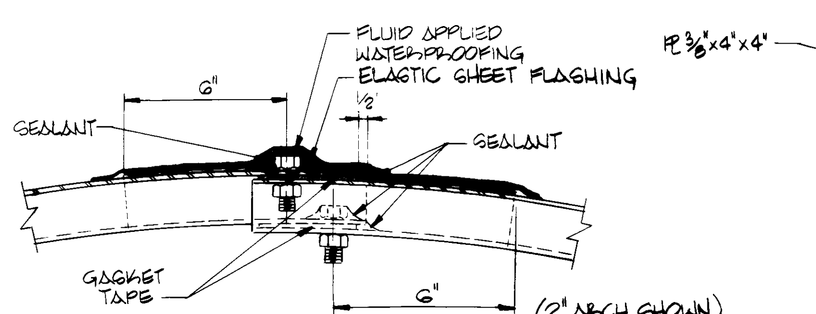

TYPICAL SPLICE DETAIL (2" ARCH SHOWN) (2 BOLT ROWS STAGGERED) (5½" ARCH SIMILAR) (3 BOLT ROWS, IN-LINE)
NO SCALE

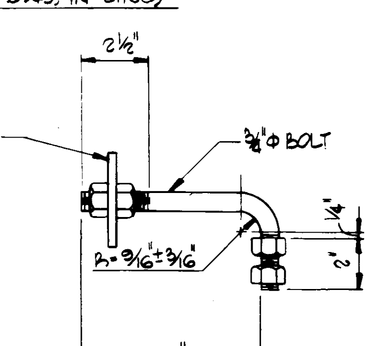

BOLT DETAIL
SCALE 3"=1'-0"

GRAPHIC SCALES:

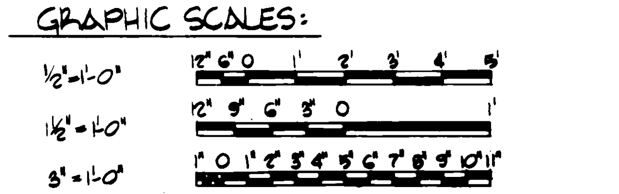

Symbol	Description	Date	Approved
△	GENERAL REVISION FOR LIGHTNING PROTECTION	11JUN98	W4W

Revisions

U.S. ARMY ENGINEER DIVISION, HUNTSVILLE
CORPS OF ENGINEERS
HUNTSVILLE, ALABAMA

Site adapt A/E :

US Army Corps of Engineers

MAGAZINE, STEEL SEMICIRCULAR-ARCH, EARTH-COVERED

2" DEEP STEEL ARCH SECTIONS AND DETAILS

Dwn. by : RDP	Ckd. by : CMB			
Reviewed by : [signature]	Date :	Sheet reference number : S-2	Design file no.: 30087	Rev.
Approved by : [signature]	Drawing code : STD 421-80-01		Sheet 3 of 11	