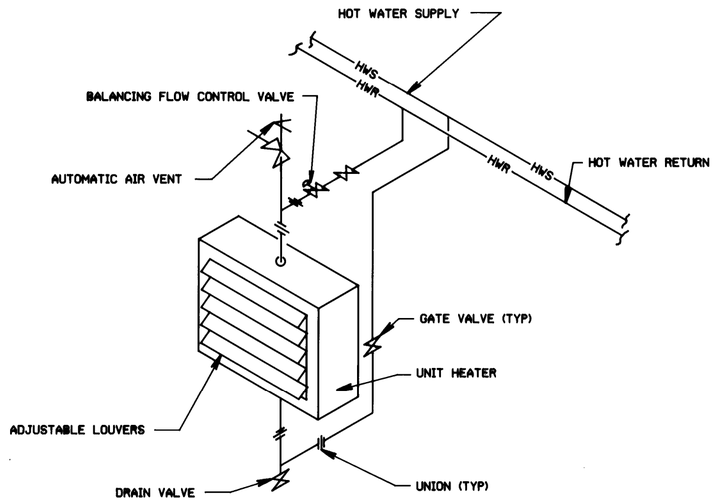

UNIT HEATER DETAIL
N.T.S.

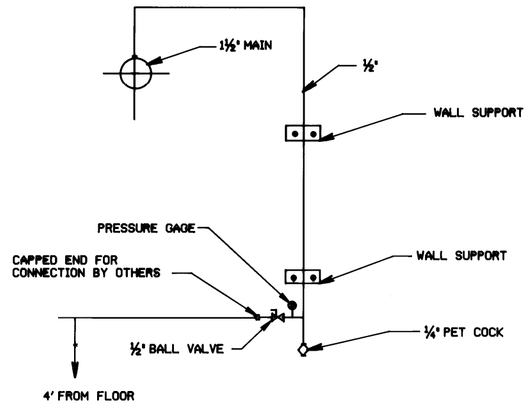

AIR OUTLET DETAIL
N. T. S.

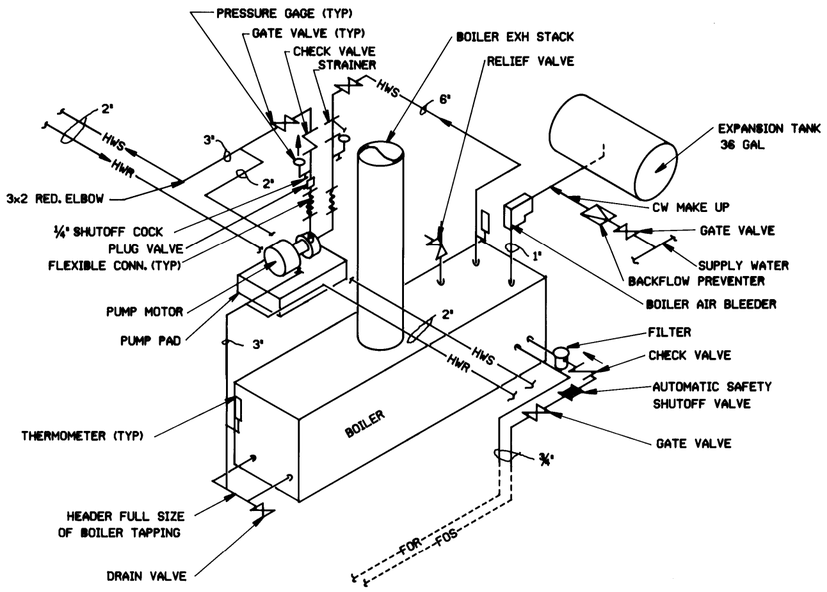

BOILER DETAIL
N. T. S.

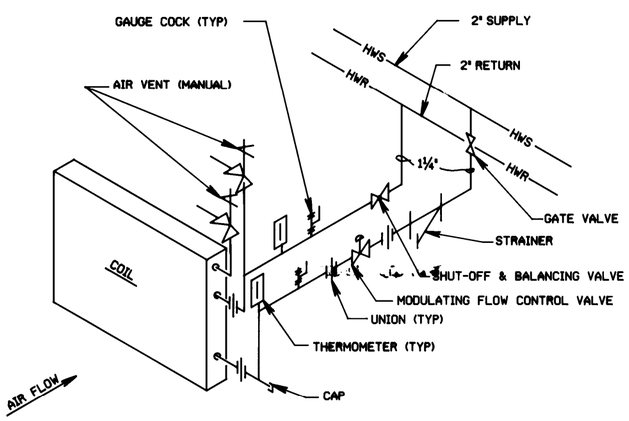

HOT WATER COIL DETAIL
N. T. S.

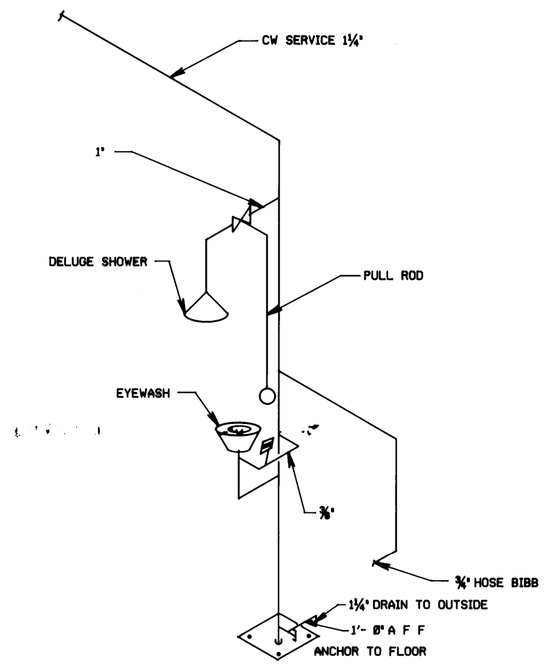

SHOWER,EYEWASH,WALL HYDRANT DETAIL
N. T. S.

Symbol	Description	Date	Approved
	Revisions		

US ARMY ENGINEER DIVISION HUNTSVILLE
CORPS OF ENGINEERS
HUNTSVILLE, ALABAMA

Site adapt A/E :

US Army Corps of Engineers

STANDARD DESIGN
AMMUNITION SURVEILLANCE FACILITY

DETAILS

Dwn. by : CJL | Ckd. by : RS

Reviewed by : CAW | Date : | Sheet reference number : | Design file no. : | Rev.

Approved by : | Drawing code : STD 216-12-02 | XM-1 | Sheet of