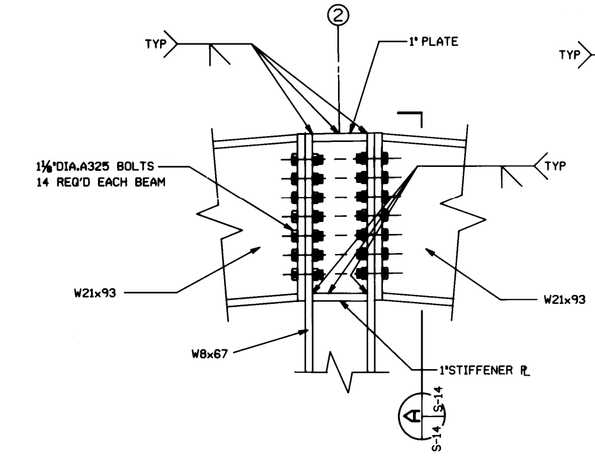

DETAIL 7 (S-12 | S-14)
SCALE: 1½"=1'-0"

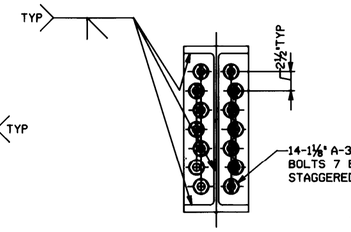

SECTION A (S-14 | S-14)
SCALE: 1½"=1'-0"

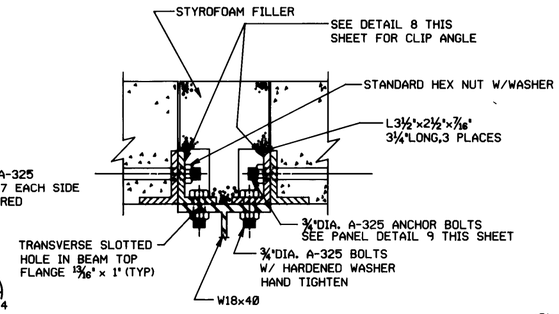

TYPICAL PRECAST ROOF PANEL TO BEAM CONNECTION
SCALE: 3"=1'-0"

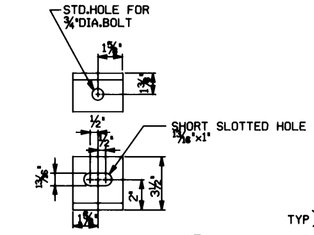

DETAIL 8 (S-14 | S-14)
SCALE:3"=1'-0"

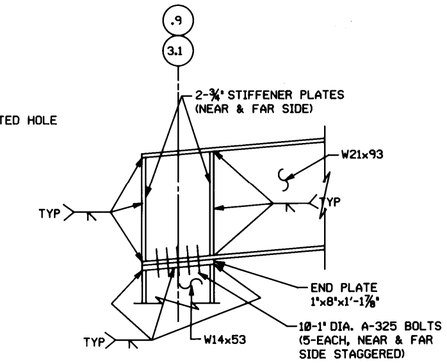

DETAIL 10 (S-12 | S-14)
SCALE:1"=1'-0"

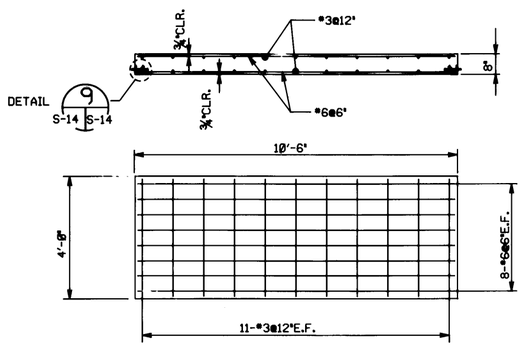

DETAIL 9 (S-14 | S-14)

TYPICAL PRECAST ROOF PANEL
SCALE:½"=1'-0"

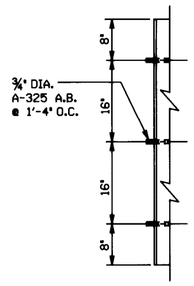

SECTION B (S-14 | S-14)
SCALE: 1"=1'-0"

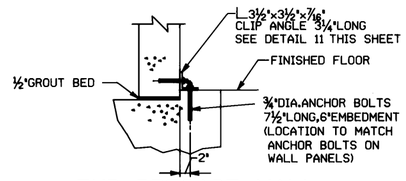

TYP. PRECAST WALL TO FDN. CONNECTION
SCALE: 1"=1'-0"

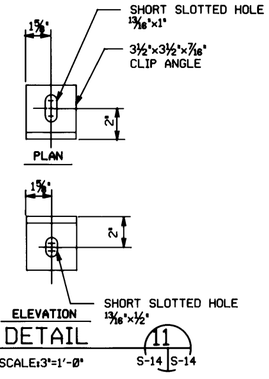

DETAIL 11 (S-14 | S-14)
SCALE:3"=1'-0"

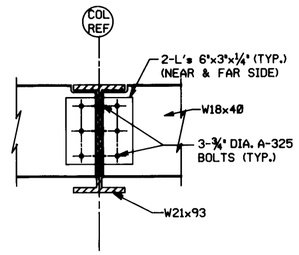

TYPICAL W18 PURLIN TO W21 BEAM CONNECTION
SCALE:1"=1'-0"

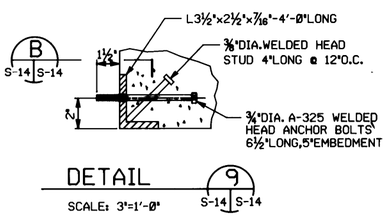

DETAIL 9 (S-14 | S-14)
SCALE: 3"=1'-0"

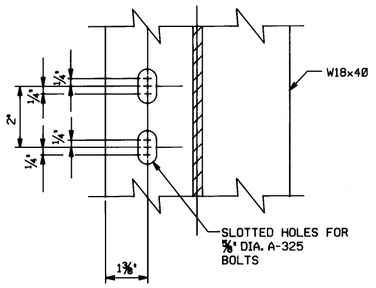

SECTION D (S-14 | S-14)
SCALE:6"=1'-0"

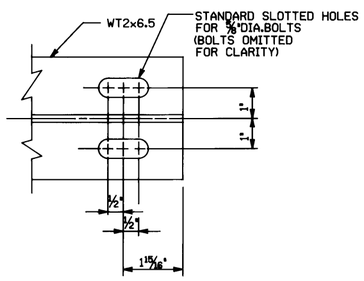

SECTION E (S-14 | S-14)
SCALE:6"=1'-0"

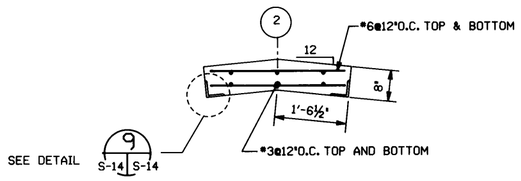

TYPICAL RIDGE PRECAST ROOF PANEL
SCALE : ¾"=1'-0"

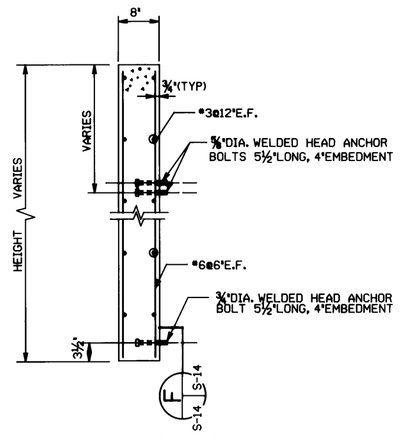

TYPICAL PRECAST WALL PANEL
SCALE:1"=1'-0"

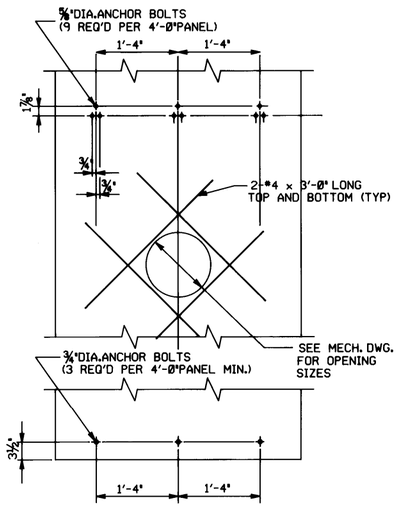

SECTION F (S-14 | S-14)
SCALE:1"=1'-0"

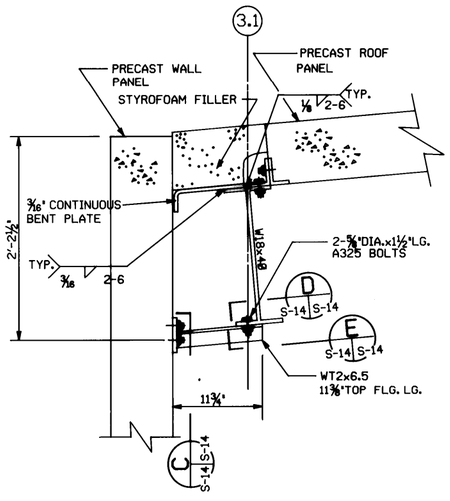

TYPICAL PRECAST WALL & ROOF PANEL CONNECTION
SCALE:1½"=1'-0"
NOTE: SEE ARCHITECURAL DRAWINGS FOR PANEL SIZES.

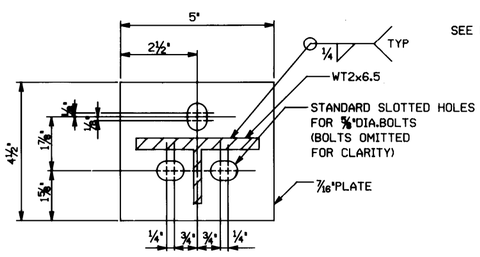

SECTION C (S-14 | S-14)
SCALE:6"=1'-0"

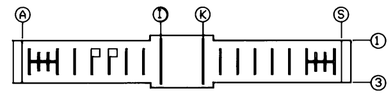

KEY PLAN

Symbol	Description	Date	Approved
	Revisions		

US ARMY ENGINEER DIVISION HUNTSVILLE
CORPS OF ENGINEERS
HUNTSVILLE, ALABAMA

Site adapt A/E :

US Army Corps of Engineers

STANDARD DESIGN
AMMUNITION SURVEILLANCE FACILITY
MISCELLANEOUS DETAILS

Dwn. by : RDP | Ckd. by :
Reviewed by : | Date :
Approved by :
Drawing code : STD 216-12-02
Sheet reference number : S-14
Design file no. : | Rev.
Sheet of