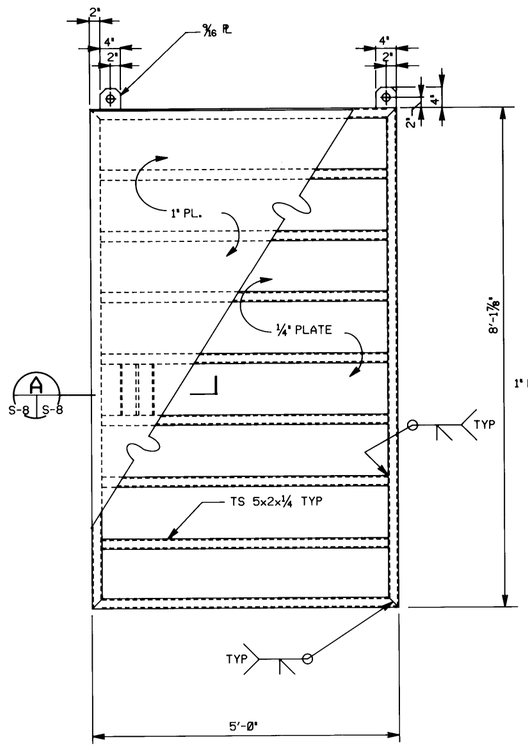


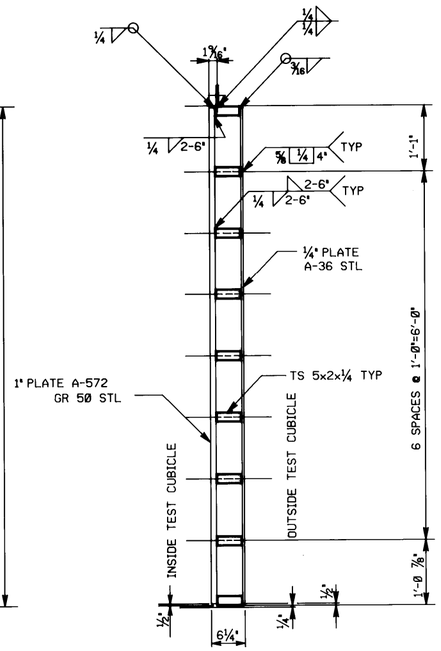


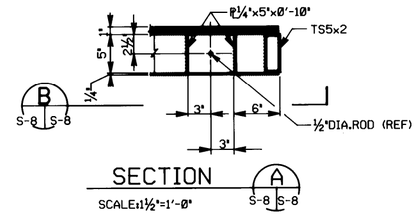


SECTION A S-8 S-8

SCALE: 1 1/2"=1'-0"

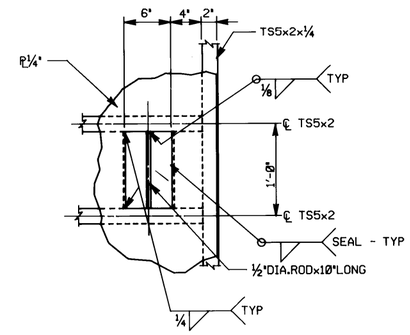


VIEW B S-8 S-8

SCALE: 1 1/2"=1'-0"

BLAST DOOR DETAIL
FOR TEST CUBICLE

SCALE 1"= 1'-0"

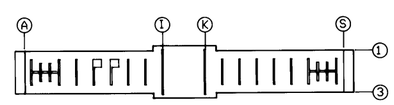


KEY PLAN

| Symbol | Description | Date | Approved |
|---|---|---|---|
| | Revisions | | |

US ARMY ENGINEER DIVISION HUNTSVILLE
CORPS OF ENGINEERS
HUNTSVILLE, ALABAMA

Site adapt A/E :

US Army Corps of Engineers

STANDARD DESIGN
AMMUNITION SURVEILLANCE FACILITY
TEST CUBICLE BLAST DOOR

Dwn. by : RDP
Ckd. by :
Reviewed by :
Date :
Approved by :
Drawing code : STD 216 - 12 - 02
Sheet reference number : S-8
Design file no. :
Rev.
Sheet of