CORPS OF ENGINEERS | 4 | 3 | 2 | 1 | U. S. ARMY

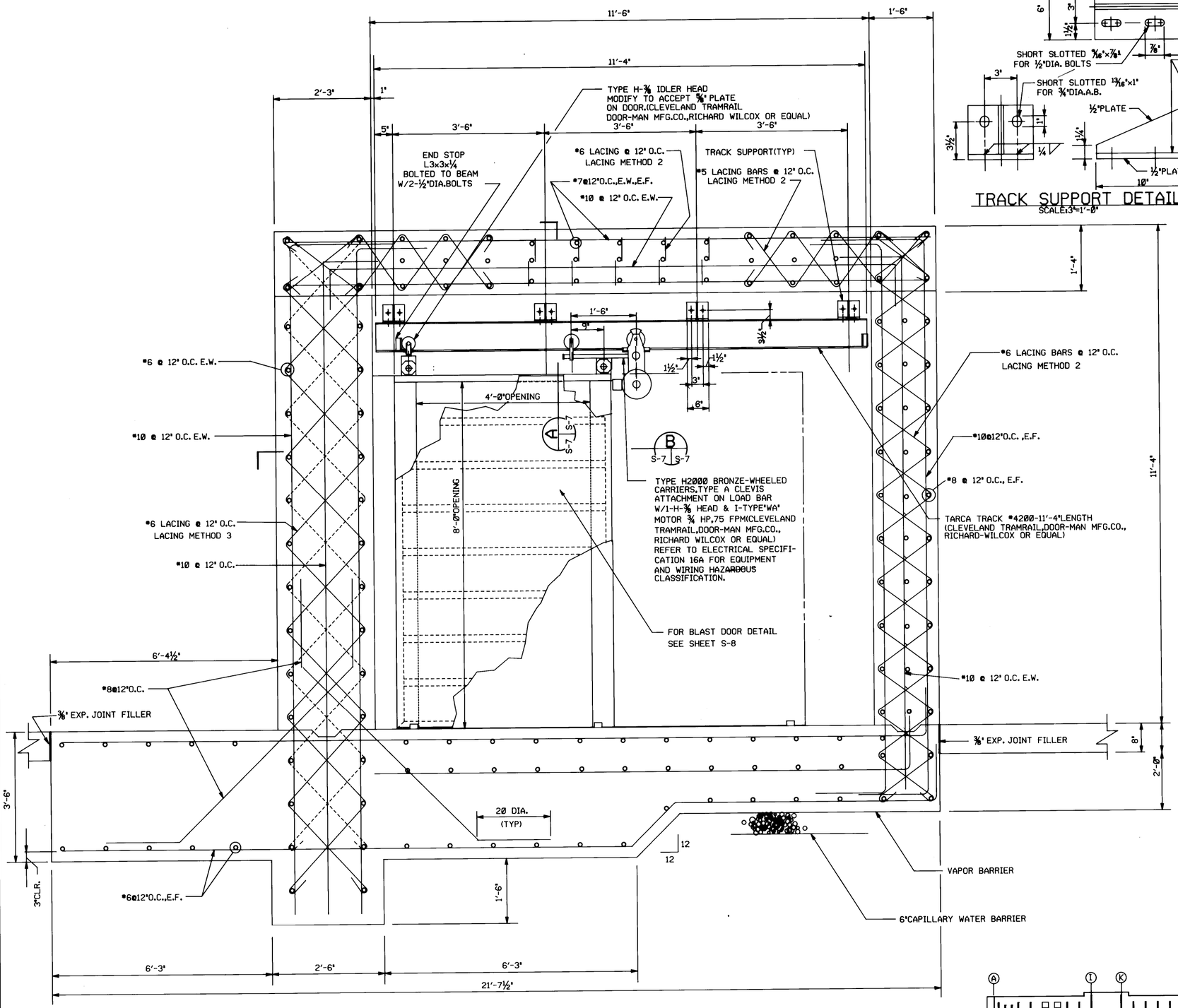

SECTION R
S-6 S-7
SCALE:1"=1'-0"

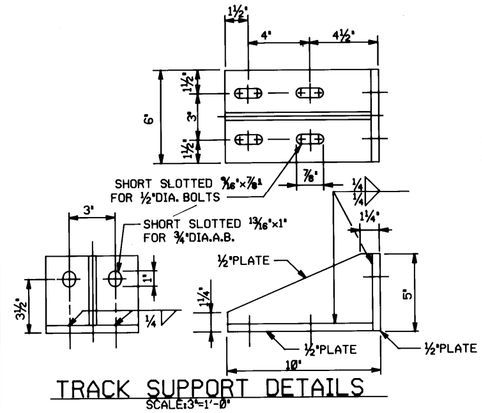

TRACK SUPPORT DETAILS
SCALE:3"=1'-0"

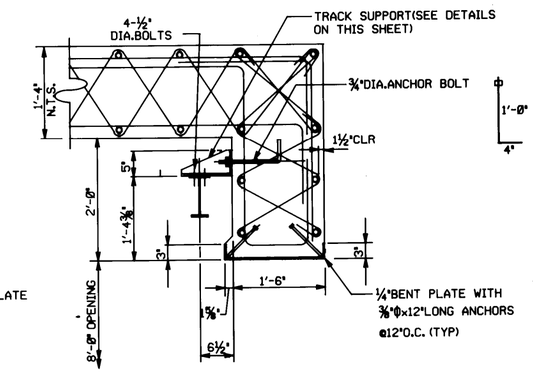

SECTION A
S-7 S-7
SCALE:1"=1'-0"

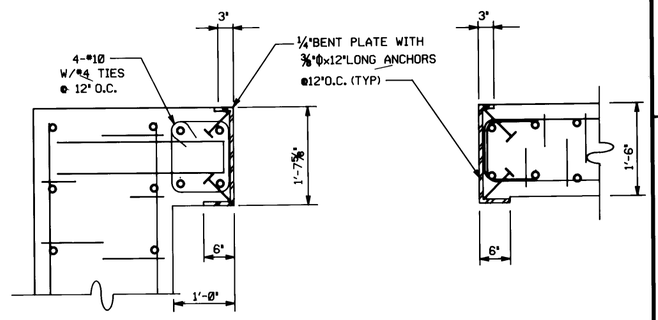

SECTION B
S-7 S-7
SCALE:1"=1'-0"

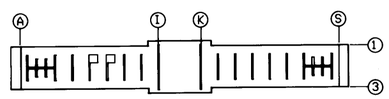

KEY PLAN

Symbol	Description	Date	Approved
	Revisions		

US ARMY ENGINEER DIVISION HUNTSVILLE
CORPS OF ENGINEERS
HUNTSVILLE, ALABAMA

Site adapt A/E :

US Army Corps of Engineers

STANDARD DESIGN
AMMUNITION SURVEILLANCE FACILITY
TEST CUBICLE

Dwn. by : RDP
Ckd. by :
Reviewed by :
Date :
Approved by :
Drawing code : STD 216 - 12 - 02
Sheet reference number : S-7
Design file no. :
Rev.
Sheet of

5 | 4 | 3 | 2 | 1