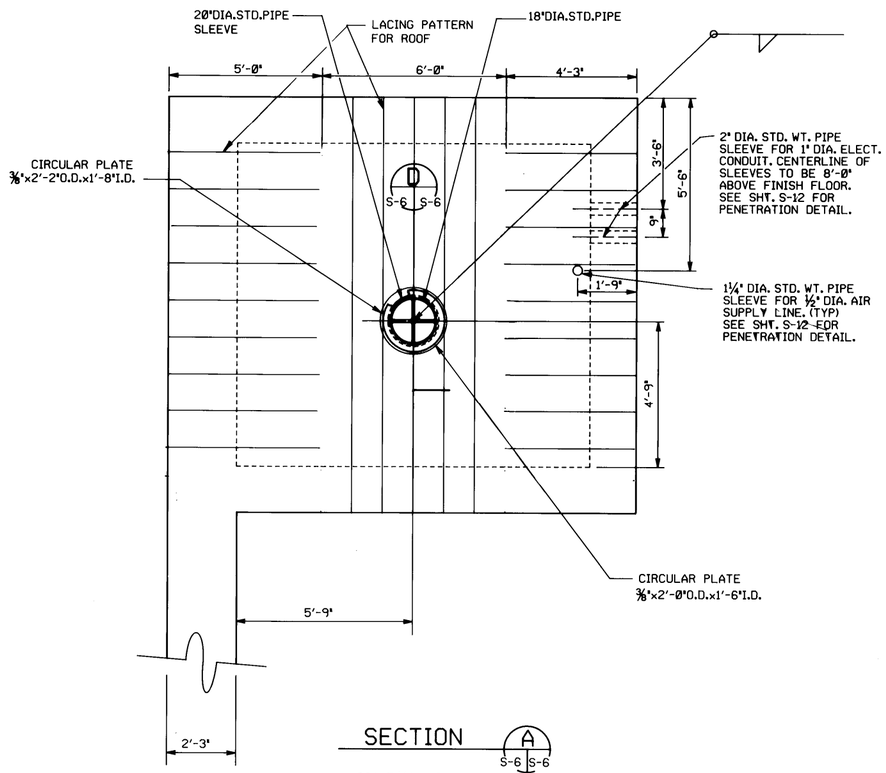

SECTION A S-6 S-6
SCALE: ½"=1'-0"

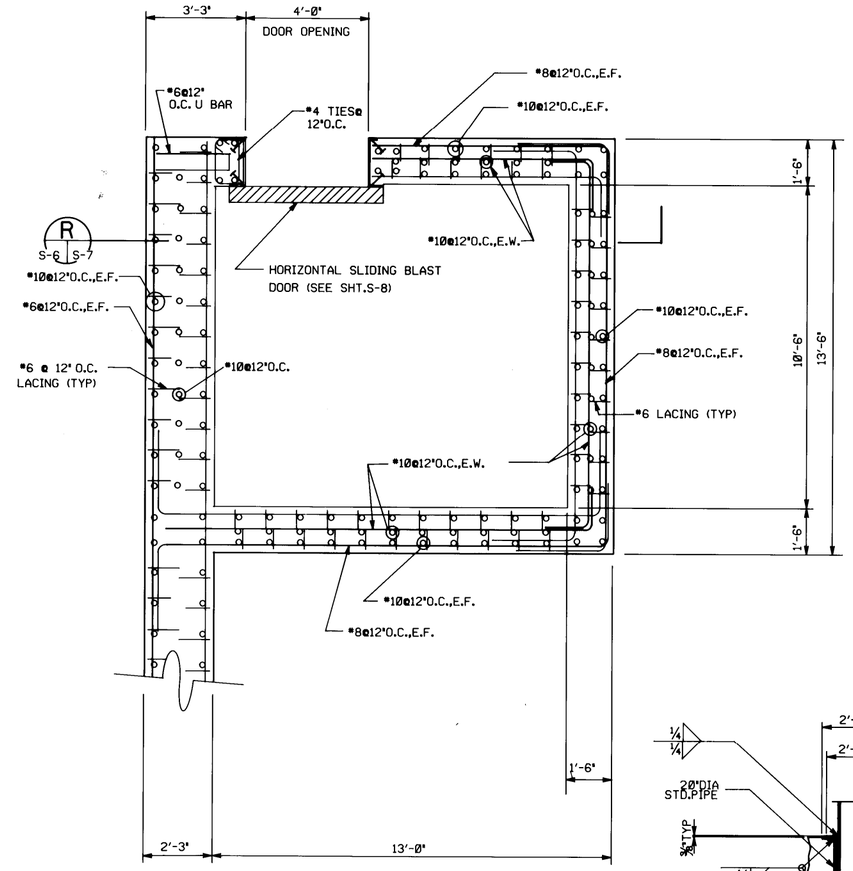

SECTION B S-6 S-6
SCALE: ½"=1'-0"

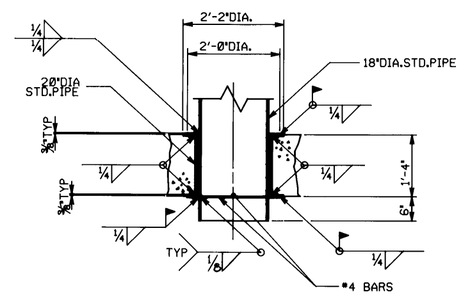

SECTION D S-6 S-6
SCALE: ¾"=1'-0"

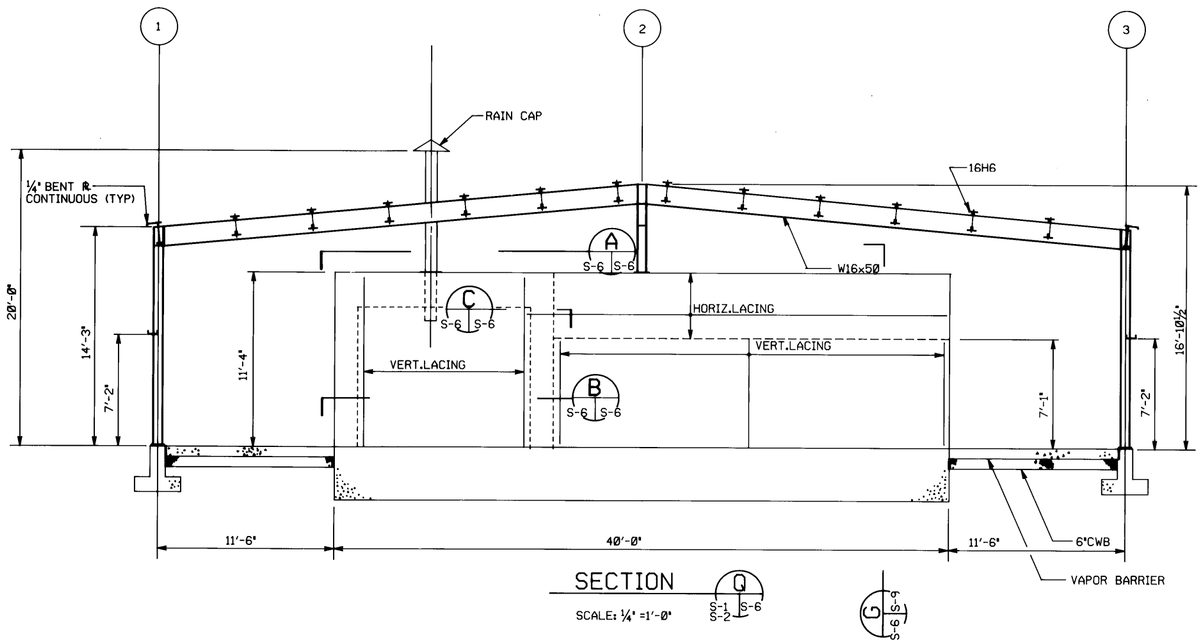

SECTION Q S-1 S-2 S-6
SCALE: ¼" =1'-0"

G S-6 S-9

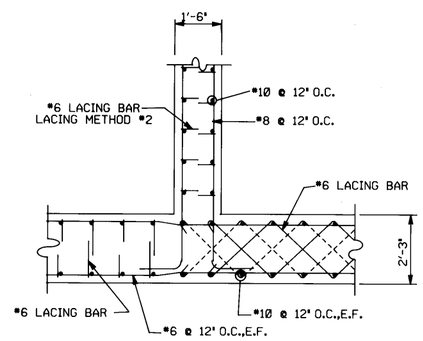

SECTION C S-6 S-6
SCALE: ½"=1'-0"

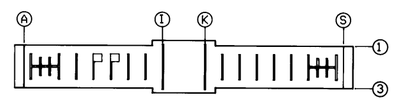

KEY PLAN

Symbol	Description	Date	Approved
	Revisions		

US ARMY ENGINEER DIVISION HUNTSVILLE
CORPS OF ENGINEERS
HUNTSVILLE, ALABAMA

Site adapt A/E :

US Army Corps of Engineers

STANDARD DESIGN
AMMUNITION SURVEILLANCE FACILITY
TEST CUBICLE

Dwn. by : RDP
Ckd. by :
Reviewed by :
Date :
Approved by :
Drawing code : STD 216 - 12 - 02
Sheet reference number : S-6
Design file no. :
Rev.
Sheet of