CORPS OF ENGINEERS | 4 | 3 | 2 | 1 | U. S. ARMY

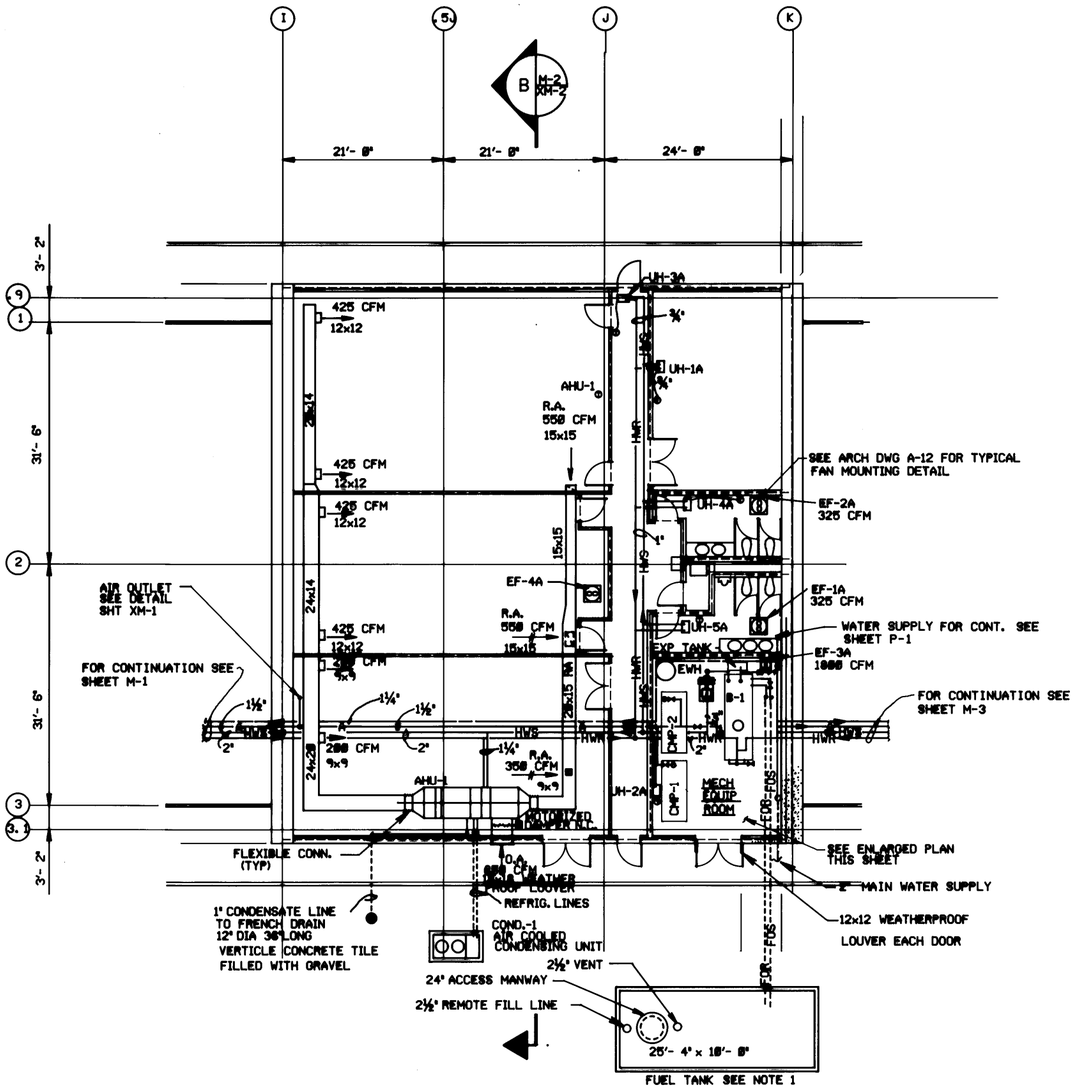

PARTIAL FLOOR PLAN - PIPING

SCALE: 1/8" = 1'- 0"

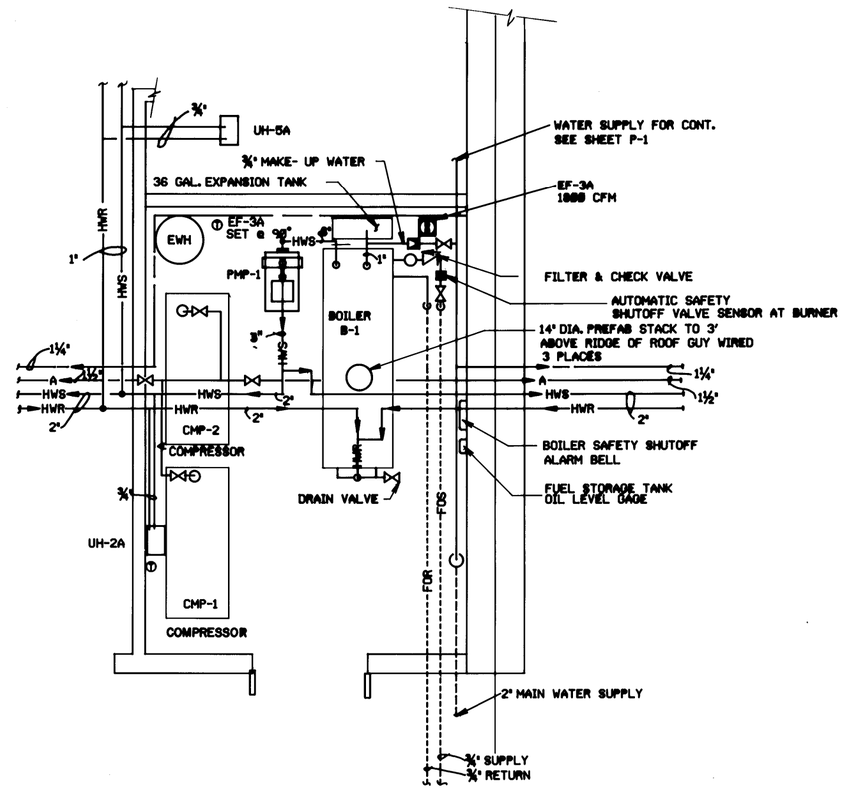

MECH ROOM - FLOOR PLAN

SCALE: 3/8" = 1'- 0"

NOTES

1. LOCATION OF FUEL STORAGE TANK IS BY USER & SHALL BE IN ACCORDANCE WITH NFPA NO. 30 & DARCOM R 385-100.

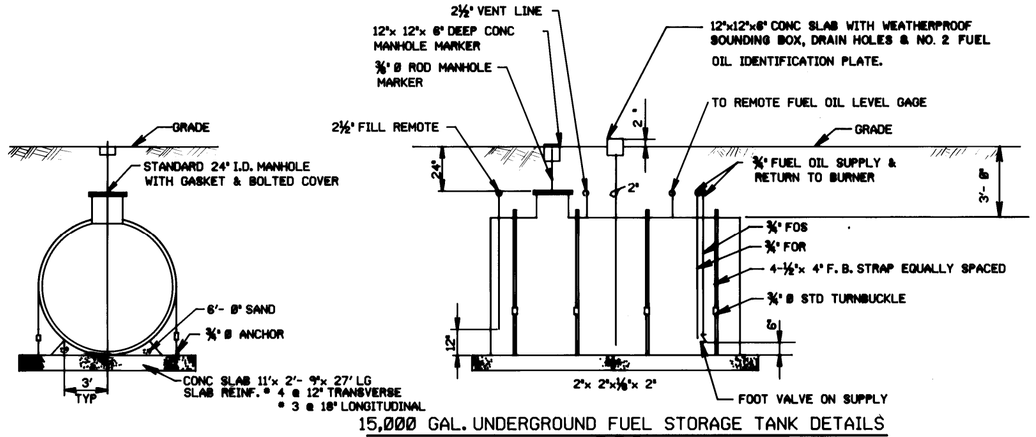

15,000 GAL. UNDERGROUND FUEL STORAGE TANK DETAILS

N. T. S.

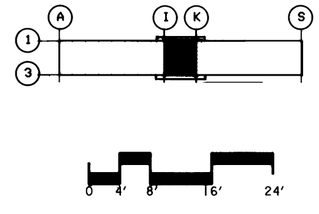

Symbol	Description Revisions	Date	Approved

US ARMY ENGINEER DIVISION HUNTSVILLE
CORPS OF ENGINEERS
HUNTSVILLE, ALABAMA

Site adapt A/E :

US Army Corps of Engineers

STANDARD DESIGN
AMMUNITION SURVEILLANCE FACILITY

HEATING & VENTILATION PLAN

Dwn. by : C L | Ckd. by : R S

Reviewed by : CCW | Date : | Sheet reference number : M - 2 | Design file no. : | Rev.

Approved by : | Drawing code : STD 216-12-02 | Sheet of

5 | 4 | 3 | 2 | 1