CORPS OF ENGINEERS | 4 | 3 | 2 | 1 | U. S. ARMY

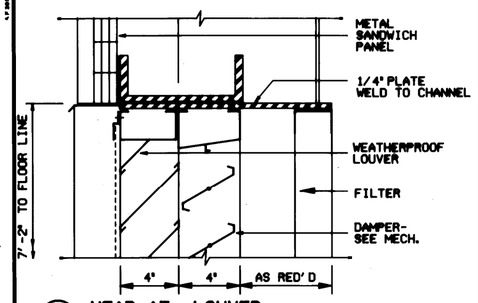

HEAD AT LOUVER
A-1/A-3 | A-12 SCALE: 3" = 1'-0"

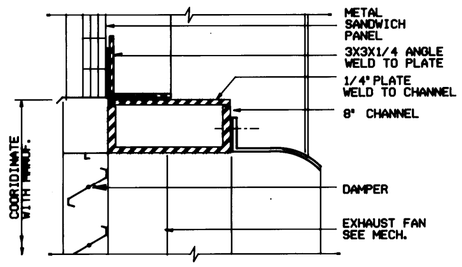

HEAD AT EXHAUST FAN
A-1/A-3 | A-12 SCALE: 1 1/2" = 1'-0"

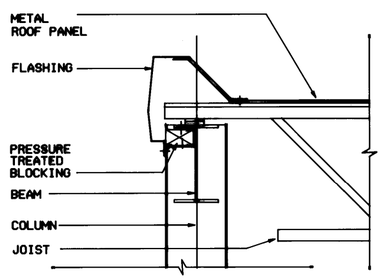

RAKE DETAIL AT APRON
A-3 | A-12 SCALE: 1 1/2" = 1'-0"

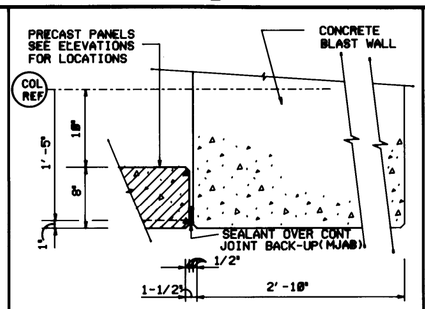

PRECAST @ BLAST WALL
A-2 | A-12 SCALE: 1 1/2" = 1'-0"

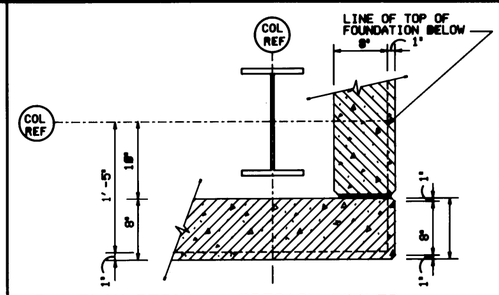

PLAN DETAIL @ PRECAST CORNER
A-2 | A-12 SCALE: 1 1/2" = 1'-0"

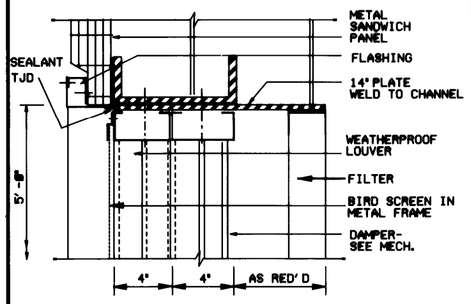

JAMB AT LOUVER
A-1/A-3 | A-12 SCALE: 3" = 1'-0"

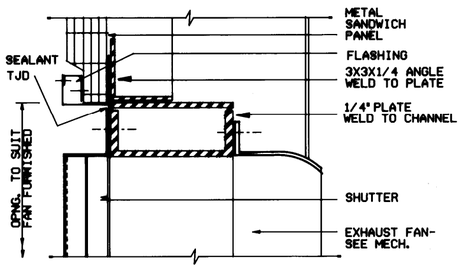

JAMB AT EXHAUST FAN
A-1/A-3 | A-12 SCALE: 1 1/2" = 1'-0"

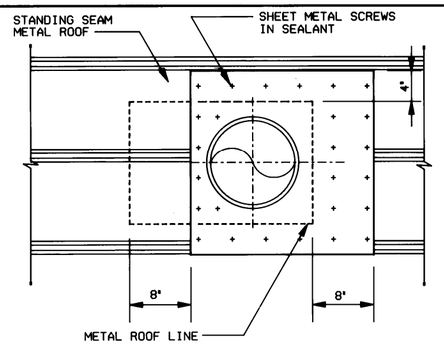

FLASHING DETAIL
A-12 | A-12 SCALE: 1 1/2" = 1'-0"

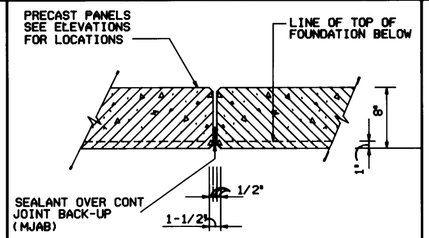

PLAN DETAIL @ TYPICAL PANEL
A-2 | A-12 SCALE: 1 1/2" = 1'-0"

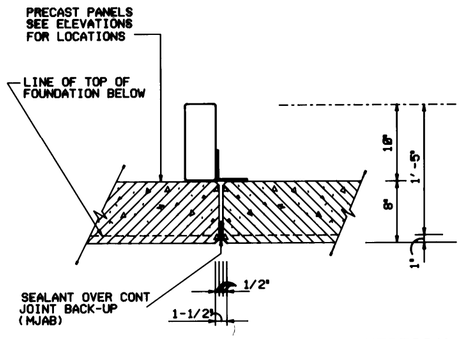

TYPICAL PLAN DETAIL @ VERTICAL JOINT FOR TYPE "A" PANELS ONLY
A-2 | A-12 SCALE: 1 1/2" = 1'-0"

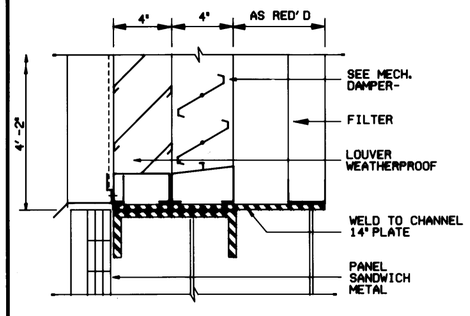

SILL AT LOUVER
A-1/A-3 | A-12 SCALE: 3" = 1'-0"

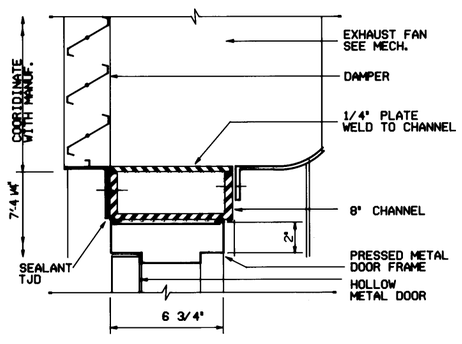

SILL AT EXHAUST FAN
A-1/A-3 | A-12 SCALE: 3" = 1'-0"

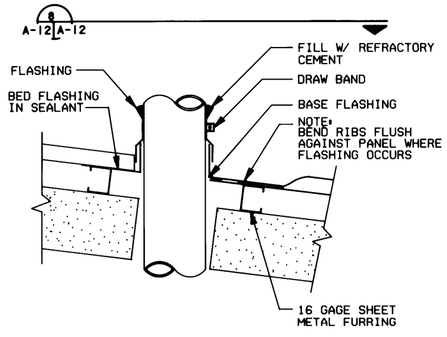

FLASHING @ STACK
A-4 | A-12 SCALE: 1 1/2" = 1'-0"

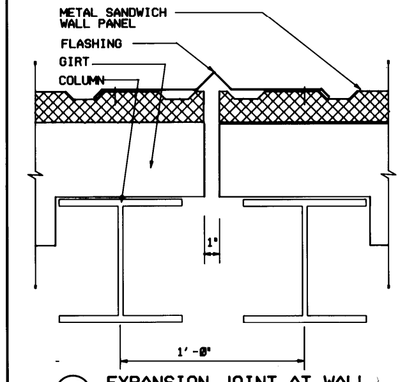

EXPANSION JOINT AT WALL
A-1/A-3 | A-12 SCALE: 3" = 1'-0"

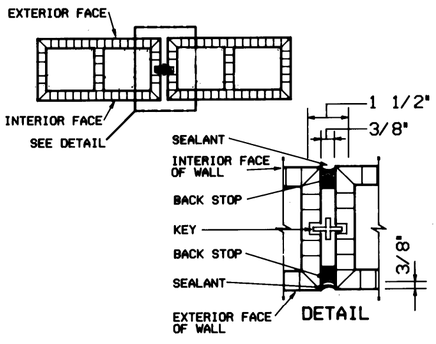

CMU CONTROL JOINT
A-2 | A-12 SCALE: 1 1/2" = 1'-0"

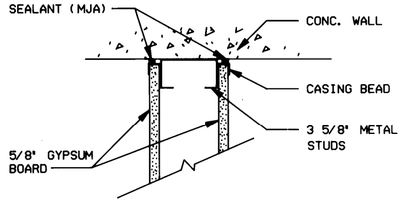

GYPSUM BOARD @ CONCRETE WALL
A-2 | A-12 SCALE: 3" = 1'-0"

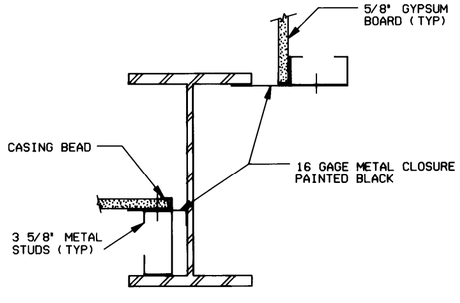

GYPSUM BOARD @ COLUMN
A-2 | A-12 SCALE: 3" = 1'-0"

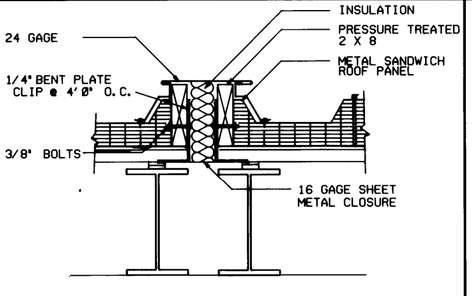

ROOF EXPANSION JOINT DETAIL
A-4 | A-12 SCALE: 1 1/2" = 1'-0"

Symbol	Description	Date	Approved
	Revisions		

US ARMY ENGINEER DIVISION HUNTSVILLE
CORPS OF ENGINEERS
HUNTSVILLE, ALABAMA

Site adapt A/E :

US Army Corps of Engineers

STANDARD DESIGN
AMMUNITION SURVEILLANCE FACILITY
DETAILS

Dwn. by : PB/CM | Ckd. by : CM

Reviewed by : JFS | Date : | Sheet reference number : A-12 | Design file no. : | Rev.

Approved by : | Drawing code : STD 216-12-02 | Sheet of

5 | 4 | 3 | 2 | 1

E D C B A