CORPS OF ENGINEERS | 4 | 3 | 2 | 1 | U. S. ARMY

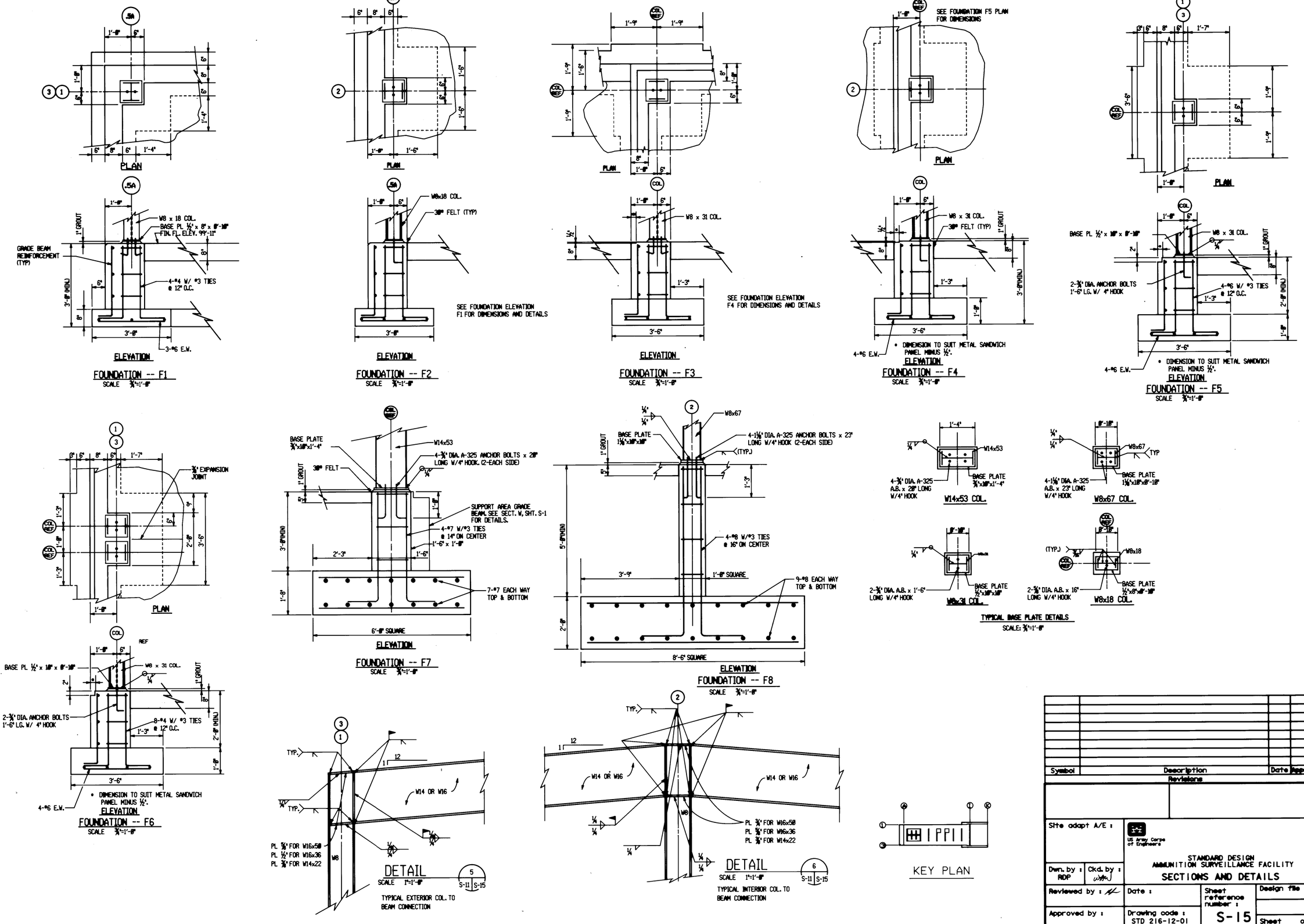

Symbol	Description	Date	Approved
	Revisions		

Site adapt A/E :

US Army Corps of Engineers

Dwn. by : RDP | Ckd. by :

STANDARD DESIGN
AMMUNITION SURVEILLANCE FACILITY

SECTIONS AND DETAILS

Reviewed by : | Date : | Sheet reference number : S-15 | Design file no. : | Rev.

Approved by : | Drawing code : STD 216-12-01 | Sheet of

5 | 4 | 3 | 2 | 1