CORPS OF ENGINEERS | 4 | 3 | 2 | 1 | U. S. ARMY

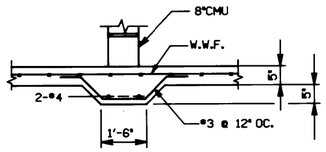

TYPICAL THICKENED SLAB

N.T.S.

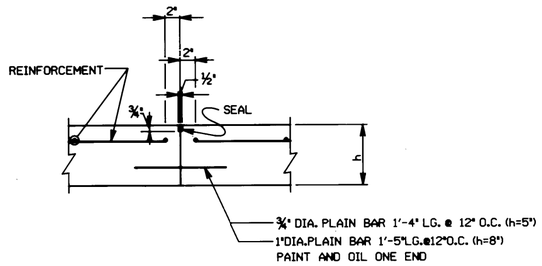

CONSTRUCTION JOINT

N.T.S.

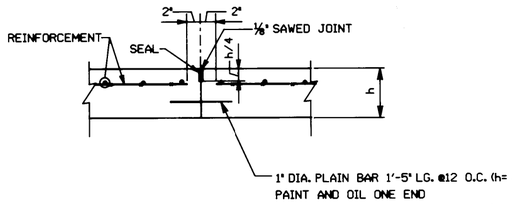

CRACK CONTROL JOINT

N.T.S.

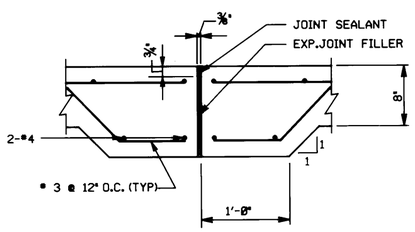

EXPANSION JOINT

SCALE:1½"=1'-0"

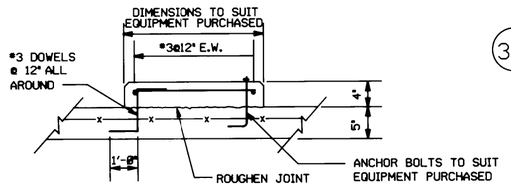

TYPICAL EQUIPMENT PAD DETAIL

N.T.S.

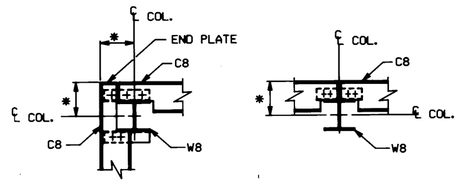

TYPICAL GIRT CONNECTION

SCALE:¾"=1'-0"

* DIMENSION VARIES. CONNECTION TO SUIT METAL SANDWICH PANEL.

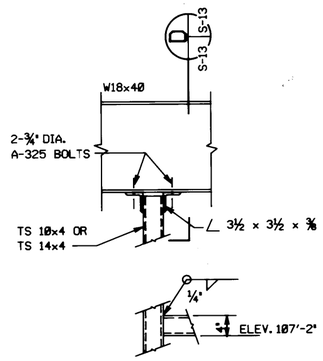

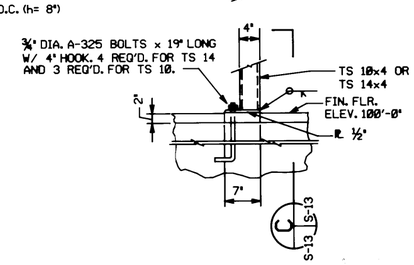

TYPICAL TUBE CONNECTION

SCALE:1"=1'-0"

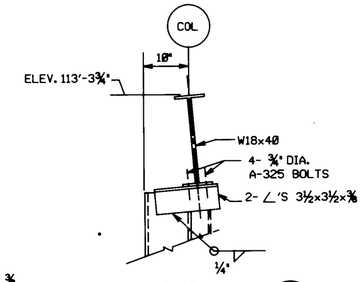

SECTION D

SCALE:1"=1'-0"

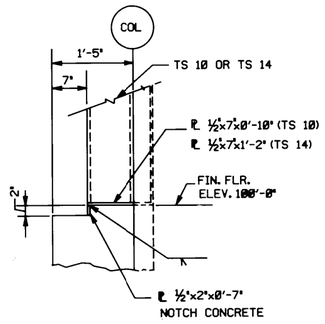

SECTION C

SCALE:1"=1'-0"

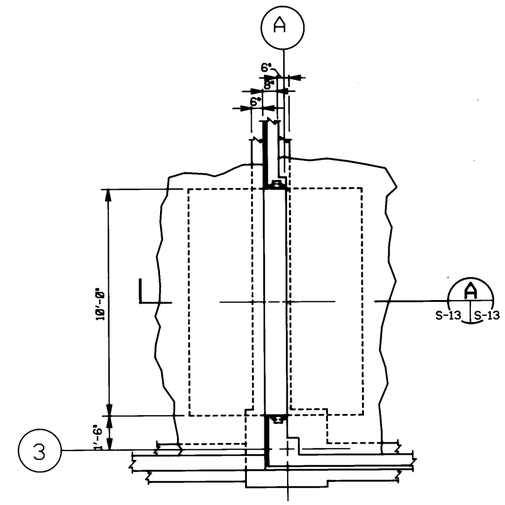

DETAIL 2

SCALE: ⅜"=1'-0"

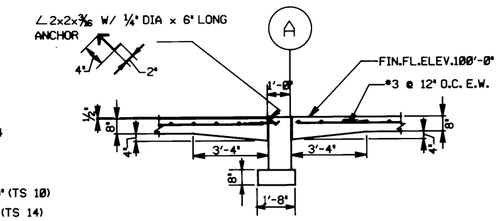

SECTION A

SCALE:⅜"=1'-0"

SEE SECT. X, SHT. S-1, FOR REINFORCEMENT AND DIMENSIONS

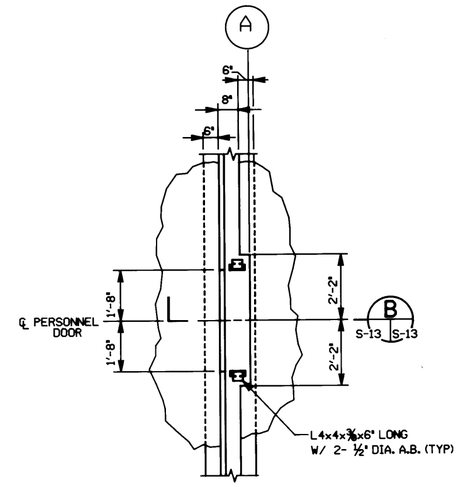

DETAIL 3

SCALE:½"=1'-0"

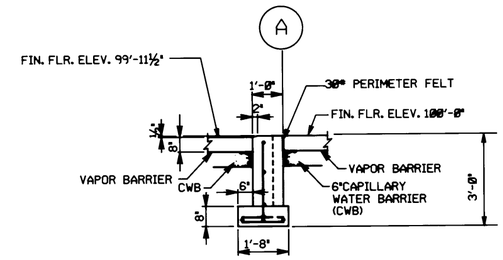

SECTION B

SCALE:½"=1'-0"

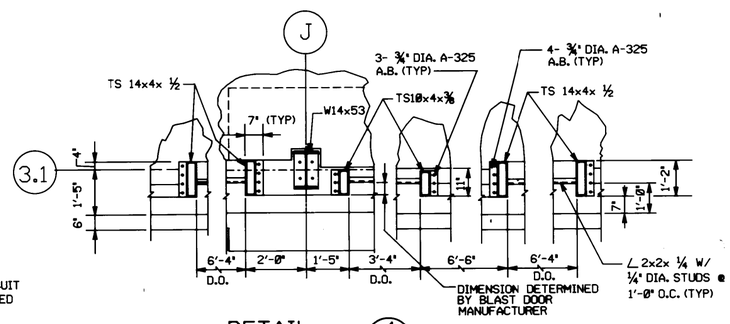

DETAIL 4

SCALE:½"=1'-0"

SEE THIS SHEET FOR TYPICAL TUBE CONNECTIONS

KEY PLAN

Symbol	Description	Date	Approved
	Revisions		

US ARMY ENGINEER DIVISION HUNTSVILLE
CORPS OF ENGINEERS
HUNTSVILLE, ALABAMA

Site adapt A/E :

US Army Corps of Engineers

STANDARD DESIGN
AMMUNITION SURVEILLANCE FACILITY
SECTIONS AND DETAILS

Dwn. by : RDP | Ckd. by :

Reviewed by : | Date : | Sheet reference number : S-13 | Design file no. : | Rev.

Approved by : | Drawing code : STD 213 12-01 | Sheet of