CORPS OF ENGINEERS | U. S. ARMY

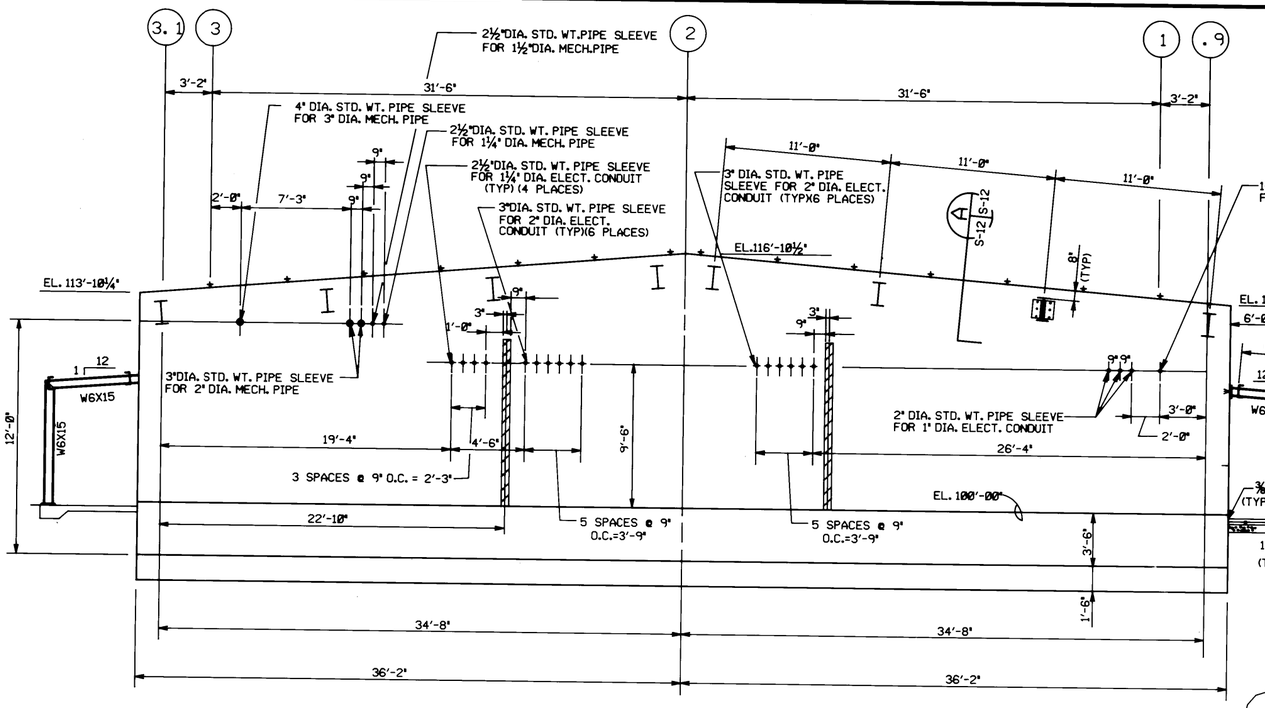

SECTION U
¼"=1'-0" S-1 S-12

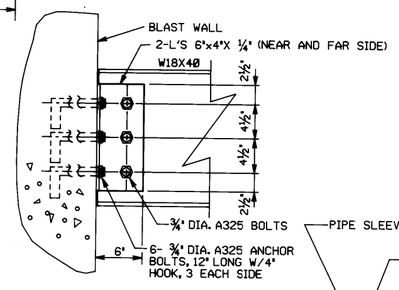

SECTION A
SCALE: 1½"= 1'-0" S-12 S-12

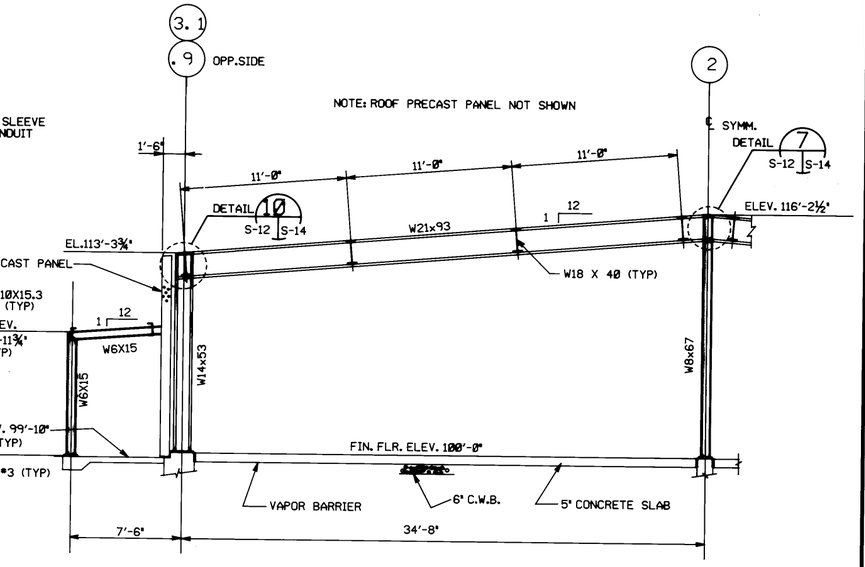

SECTION Z
¼"=1'-0" S-1 S-12

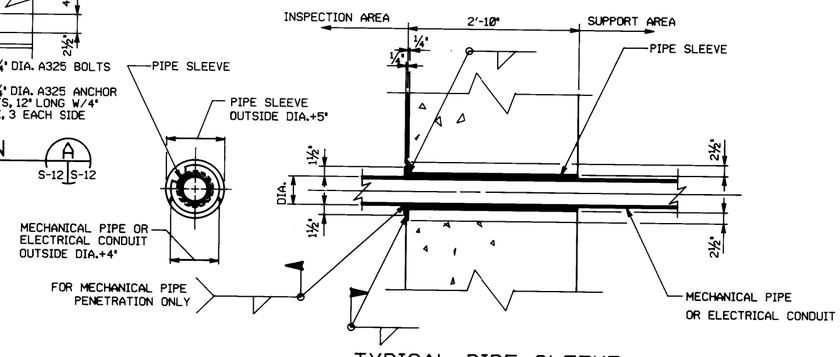

TYPICAL PIPE SLEEVE
SCALE:1"=1'-0"

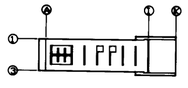

KEY PLAN

Symbol	Description	Date	Approved
	Revisions		

US ARMY ENGINEER DIVISION HUNTSVILLE
CORPS OF ENGINEERS
HUNTSVILLE, ALABAMA

Site adapt A/E :

US Army Corps of Engineers

STANDARD DESIGN
AMMUNITION SURVEILLANCE FACILITY
SECTIONS AND DETAILS

Dwn. by : RDP
Ckd. by :
Reviewed by :
Approved by :
Date :
Drawing code : STD 216 - 12 - 01
Sheet reference number : S-12
Design file no. :
Rev.
Sheet of