CORPS OF ENGINEERS | 4 | 3 | 2 | 1 | U. S. ARMY

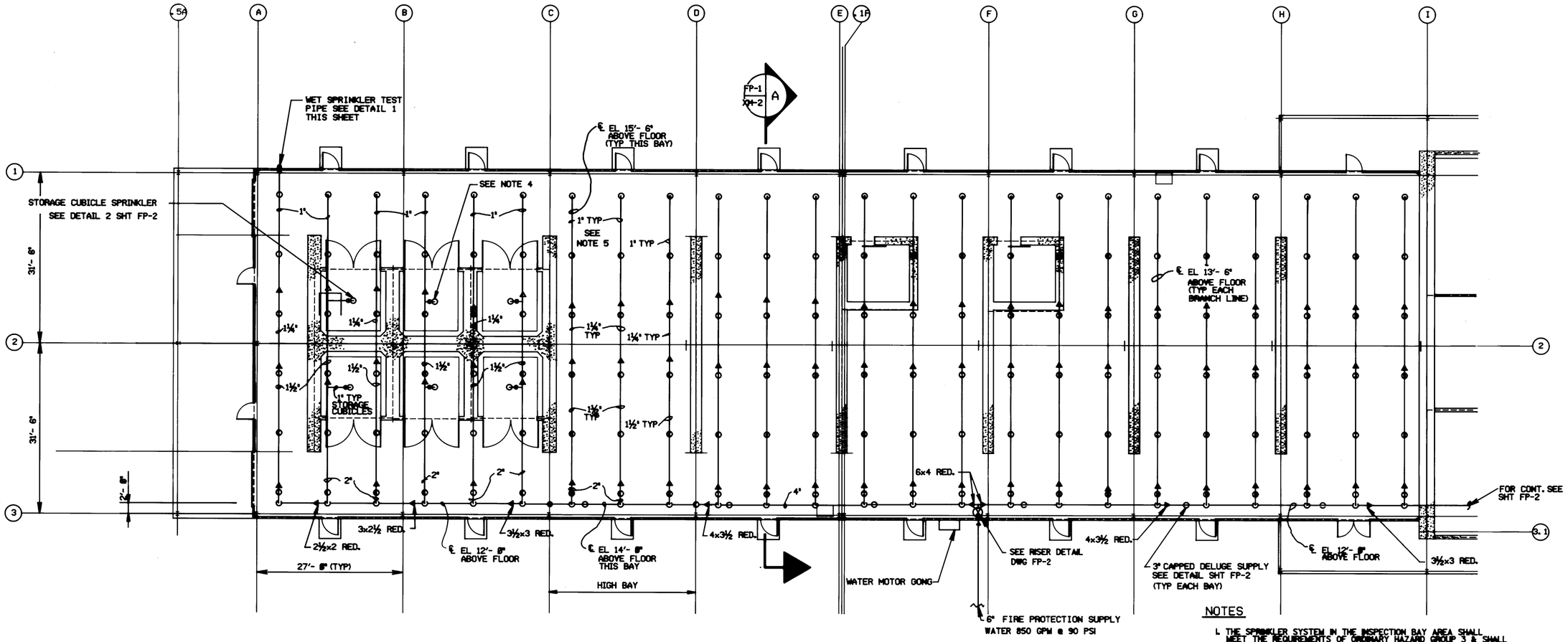

SPRINKLER SYSTEM - PARTIAL FLOOR PLAN

SCALE: 1/8" = 1'- 0"

NOTES

1. THE SPRINKLER SYSTEM IN THE INSPECTION BAY AREA SHALL MEET THE REQUIREMENTS OF ORDINARY HAZARD GROUP 3 & SHALL CONFORM TO NFPA NO.13. TYPE OF CONSTRUCTION IS NONCOMBUSTIBLE.
2. AUTOMATIC SPRINKLERS SHALL BE ½" UPRIGHT TYPE WITH ORDINARY TEMP. RATING EXCEPT THOSE WITHIN THE 7 FT. RADIUS OF A UNIT HEATER SHALL BE HIGH TEMP. RATED AT 286 F. & THOSE WITHIN THE 28 FT CONE OF THE UNIT HEATER FACE SHALL BE INTERMEDIATE TEMP. RATED AT 212 F.
3. EACH BAY WILL BE PROVIDED WITH A CAPPED DELUGE WATER SUPPLY. ACTUAL INSTALLATION OF DELUGE SYSTEM WILL BE BY USER.
4. SPRINKLERS IN THE STORAGE CUBICLES SHALL BE MOUNTED WITHIN 6" OF THE STORAGE CUBICLE CEILING. SPRINKLER IN ALL OTHER AREAS SHALL BE WITHIN 16 INCHES OF THE ROOF.
5. FIRE PROTECTION LINE SIZES FOR BANCH LINES WITHIN THE INSPECTION BAYS ARE TYPICAL. LINES SIZES ELSEWHERE ARE AS SHOWN.

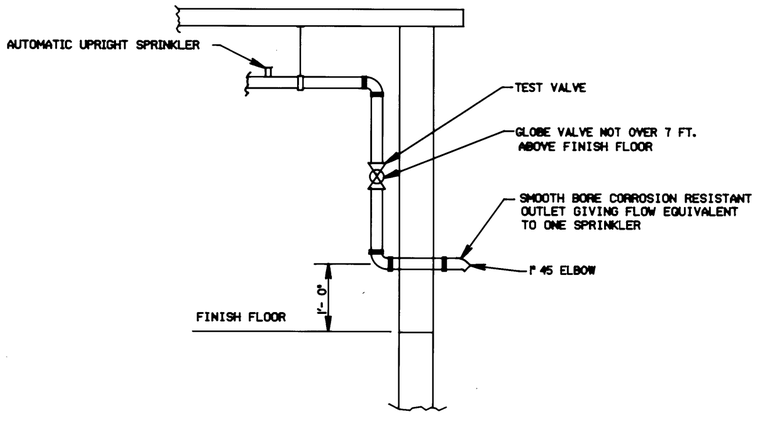

WET SPRINKLER TEST PIPE DETAIL

N. T. S.

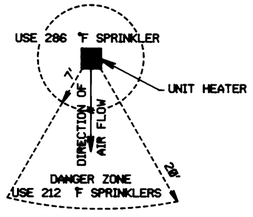

TEMPERATURE RATING OF AUTOMATIC SPRINKLERS NEAR UNIT HEATER

HEATER ZONE

N.T.S.

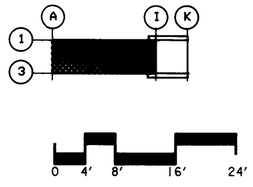

Symbol	Description	Date	Approved
	Revisions		

US ARMY ENGINEER DIVISION HUNTSVILLE
CORPS OF ENGINEERS
HUNTSVILLE, ALABAMA

Site adapt A/E :

US Army Corps of Engineers

STANDARD DESIGN
AMMUNITION SURVEILLANCE FACILITY

FIRE PROTECTION PIPING PLAN

Dwn. by : CL | Ckd. by : RS

Reviewed by : | Date : | Sheet reference number : FP _ 1 | Design file no. : | Rev.

Approved by : | Drawing code : STD 216-12-01 | Sheet of

5 | 4 | 3 | 2 | 1