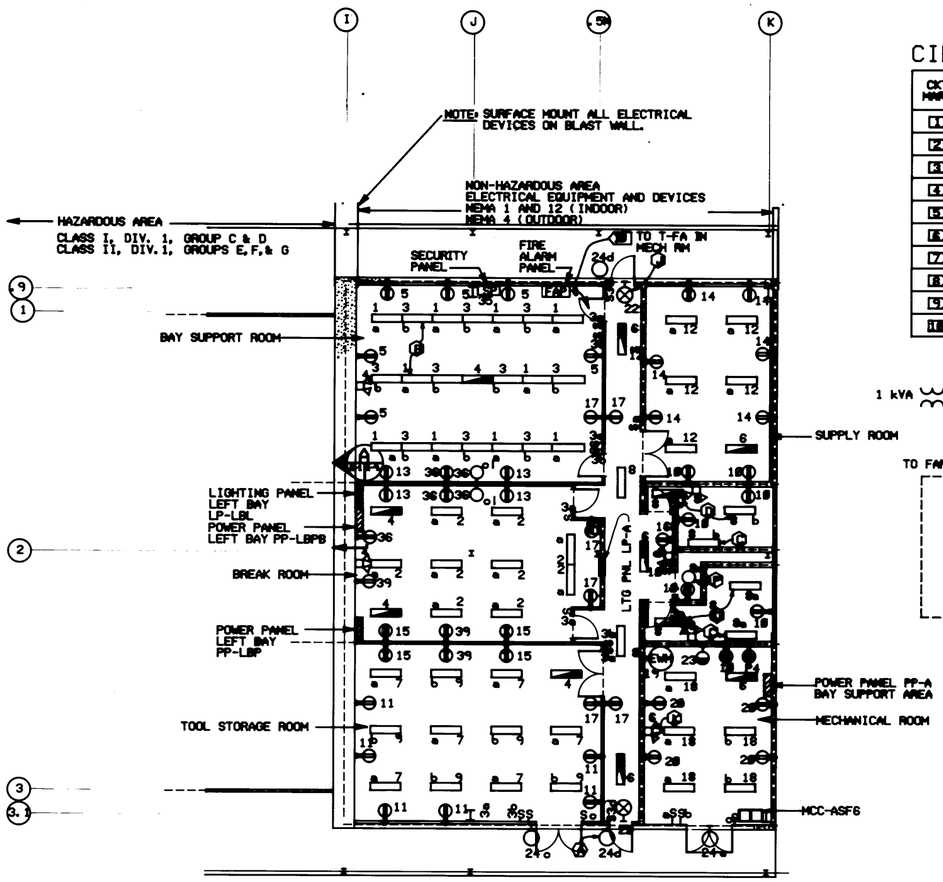

ELECTRICAL-LIGHTING PLAN

CIRCUIT SCHEDULE (REFER TO ONE LINE WIRING DIAGRAM)

CKT MARK	PHASE COND	NTRL COND SIZE	GND. WIRE SIZE	COND.	FUNCTIONAL DESCRIPTION
1	3-#4/0	#4/0	#4	2½"	FEEDER FOR PNLBD PP-A
2	3-#2	#2	#8	1½"	FEEDER FOR PNLBD LBP
3	3-#8	—	#10	1"	FEEDER TO A/C SYST CB
4	3-#10	—	#10	1"	FEEDER TO A/C SYST (13 HP TOTAL)
5	3-#8	—	#10	1"	FEEDER TO AIR COMP
6	3-#12	—	#12	¾"	FEEDER TO HW SYST PUMP MOTOR
7	3-#12	—	#12	¾"	FEEDER TO AHU (BAY SUPPORT ROOM)
8	2-#10	—	#10	1"	FEEDER TO FIRE ALARM SYSTEM SWITCH
9	2-#12	—	#12	¾"	FEEDER TO FIRE ALARM TRANSFORMER
10	1-#12	1-#12	#12	¾"	FEEDER TO FIRE ALARM PANEL

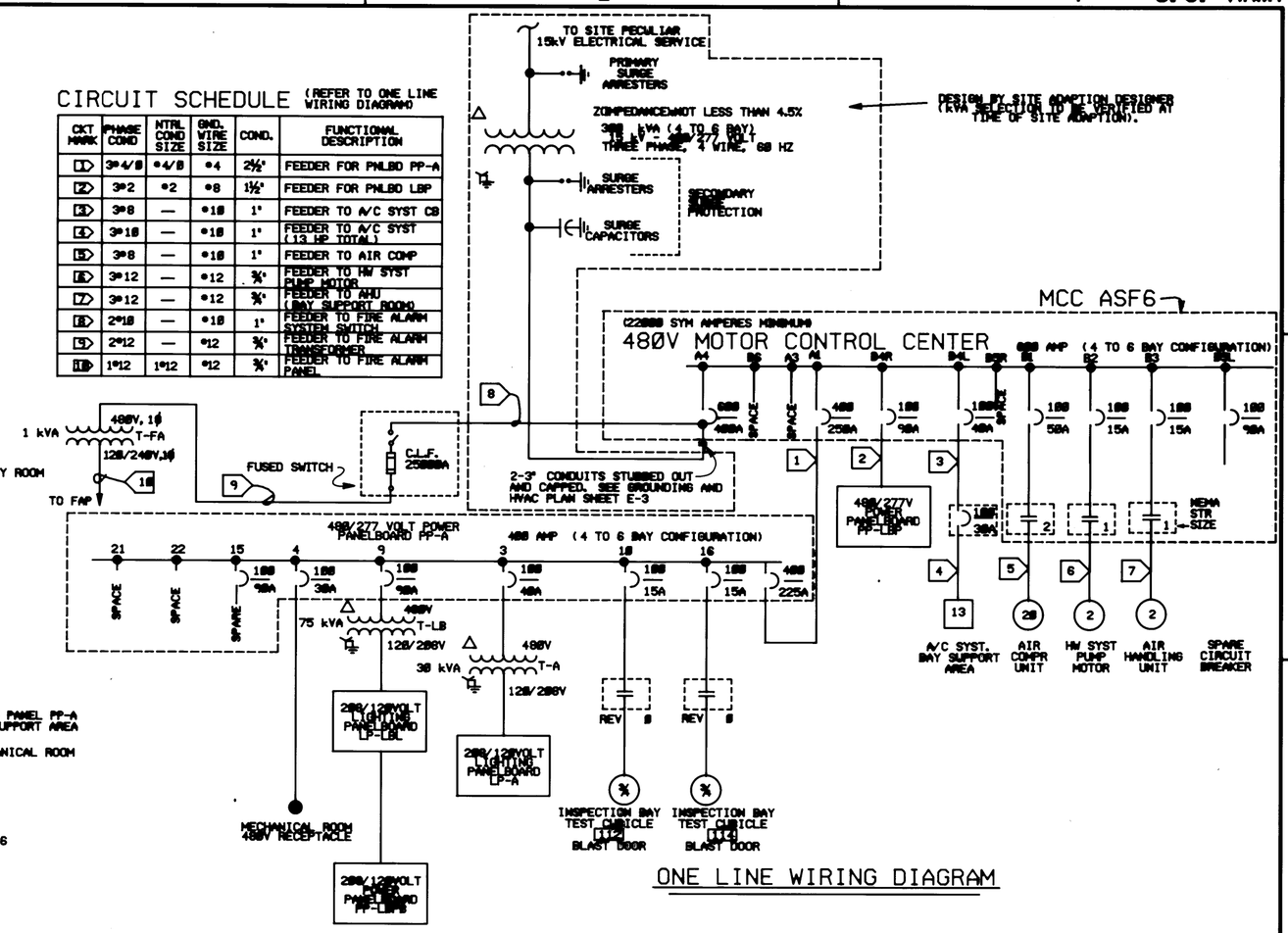

ONE LINE WIRING DIAGRAM

LTG. PANELBOARD LP-A	LOCATION CORRIDOR	SURFACE MOUNTED FLUSH BOTTOM FEED
100 AMP MAIN BREAKER W/ 90 AMP TRIP	22,000 SYM A.I.C. MIN.	
CIRCUIT BREAKER TYPE 208/120 VOLTS 3 PHASE 4 WIRE	225 AMP MAINS	

CKT. NO.	TRIP AMPS	NO. POLES	WIRE SIZE	LOAD SERVED	LOAD V-A	PHASE LOAD, V-A ø A	ø B	ø C	LOAD V-A	LOAD SERVED	WIRE SIZE	NO. POLES	TRIP AMPS	CKT. NO.
1	20	1	#12	BAY SUPPORT ROOM LIGHTING (6X)	1250	2375	-	-	1125	BREAK ROOM LIGHTING (3X)	#12	1	20	2
3	20	1	#12	BAY SUPPORT ROOM LIGHTING (5X)	1250	-	1875	-	625	BAY SUPP RM NIGHT LIGHT & EMERG LTG	#12	*1	20	4
5	20	1	#12	BAY SUPPORT ROOM RECEPTACLES (6X)	1350	-	-	2100	750	CORRIDOR NIGHT LIGHT & EMERG LTG	#12	*1	20	6
7	20	1	#12	TOOL STORAGE ROOM LIGHTING (5X)	750	1625	-	-	875	CORRIDOR & REST ROOM LIGHTING CIRCUIT	#12	*1	20	8
9	20	1	#12	TOOL STORAGE ROOM LIGHTING (5X)	625	-	1975	-	1350	REST ROOM AND MISC. AREA RECPTS.	#12	1GF	20	10
11	20	1	#12	TOOL STORAGE ROOM RECEPTACLES (5X)	1350	-	-	1975	625	SUPPLY ROOM LIGHTING	#12	1	20	12
13	20	1	#12	BAY SUPPORT & BREAK ROOM RECPTS (4X)	900	2250	-	-	1350	BREAK ROOM RECPTS (6X)	#12	1	20	14
15	20	1	#12	TOOL STORAGE AND BREAK RM RECPTS	900	-	1400	-	500	WATER COOLER RECEPTACLE	#12	1	20	16
17	20	1	#12	CORRIDOR, ADMIN OFFICE RECPTS (6X)	1350	-	-	2100	750	MECHANICAL ROOM 480V CIRCUIT LTG	#12	1	20	18
19	30	2	#10	WATER HEATER 208V, SINGLE PHASE 30A CIRCUIT	2200	3100	-	-	900	BREAK ROOM RECPTS. (4X)	#12	1	20	20
					2200	-	2400	-	200	EXIT LIGHTS	#12	1	20	22
23	30	2	#10	MECHANICAL ROOM 208V, SINGLE PHASE 30A CIRCUIT	2200	-	-	2700	500	EXT. LIGHTING	#12	1	20	24
					2200	2700	-	-	500	UH-1A	#12	1	20	26
27	20	1	#12	EXHAUST FAN EF-1	500	-	1000	-	500	UH-2A	#12	1	20	28
29	20	1	#12	EXHAUST FAN EF-2	500	-	-	1000	500	UH-3A	#12	1	20	30
31	20	1	#12	EXHAUST FAN EF-3	500	1000	-	-	500	UH-4A	#12	1	20	32
33	20	1	#12	EXHAUST FAN EF-4	500	-	1000	-	500	UH-5A	#12	1	20	34
35	20	*1	#12	SECURTY PANEL	500	-	-	1175	675	BAY SUPPORT & BREAK RM RECPTS(2X)	#12	1	20	36
37	20	1		SPARE	1000	2000	-	-	1000	SPARES		1	20	38
39	20	1	#12	BREAK RM & TOOL STORAGE RECPTS	675	-	1675	-	1000			1	20	40
41	20	1		SPARE	1000	-	-	2000	1000			1	20	42
SUPPLIED FROM PP-A AND TRANSFORMER T-A				TOTAL	14000	11025	13050		TOTAL CONNECTED LOAD 39.425 kVA 50% DEMAND EST., DEMAND LOAD 19.2kVA					

*BREAKER EQUIPPED WITH LOCKING DEVICE

PANELBOARD PP-A POWER	LOCATION MECH EQUIPMENT ROOM	SURFACE MOUNTED TOP FEED
400 AMP MAIN BREAKER W/ 225 AMP TRIP	14,000 SYM A.I.C. MIN.	
CIRCUIT BREAKER TYPE 277/480 VOLTS 3 PHASE 4 WIRE	400 AMP MAINS	

CKT. NO.	TRIP AMPS	NO. POLES	WIRE SIZE	LOAD SERVED	LOAD V-A	PHASE LOAD, V-A ø A	ø B	ø C	LOAD V-A	LOAD SERVED	WIRE SIZE	NO. POLES	TRIP AMPS	CKT. NO.
3	40	3	#8	TRANSFORMER T-A & PANELBOARD LP-A	30000				11,000	MECHANICAL ROOM 480V RECEPTACLE	#8	3	30	4
9	90	3	#2	TRANSFORMER T-LB & PNLBD. LP-LBL	75000				1000	INSPECTION BAY TEST CUBICLE 112 BLAST DOOR	#12	3	15	10
15	90	3		SPARE	75000				1000	INSPECTION BAY TEST CUBICLE 114 BLAST DOOR	#12	3	15	16
21				EQUIPPED SPACE	15000				20000	EQUIPPED SPACE				22
SUPPLIED FROM 480V MCC-ASF6				TOTAL					TOTAL CONNECTED LOAD 228 kVA DEMAND EST., DEMAND LOAD 100 kVA					

GF-BREAKER SHALL BE GROUND FAULT CIRCUIT INTERRUPTER TYPE

NOTES:

1. ALL ELECTRICAL DEVICES, LUMINAIRES AND WIRING WITHIN INSPECTION BAYS SHALL BE RATED FOR THE NATIONAL ELECTRICAL CODE HAZARD CLASSIFICATION: CLASS I, DIVISION 1, GROUPS C&D CLASS II, DIVISION 1, GROUPS E,F,&G
2. CIRCUIT NUMBERS WITHOUT A PREFIX ARE FOR PANEL LP-A.CIRCUIT NUMBERS WITH A PREFIX "P" ARE FOR PANEL PP-A.
3. FOR LEGEND AND SYMBOLS REFER TO SHEET E-7

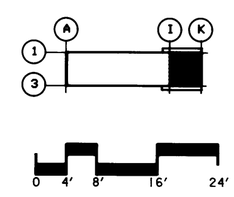

Symbol	Description	Date	Approved
	Revisions		

US ARMY ENGINEER DIVISION HUNTSVILLE
CORPS OF ENGINEERS
HUNTSVILLE, ALABAMA

Site adapt A/E :

US Army Corps of Engineers

STANDARD DESIGN
AMMUNITION SURVEILLANCE FACILITY
ONE LINE DIAGRAM,SUPPORT AREA LIGHTING & SCHEDULES

Dwn. by : CG/TT | Ckd. by : | Reviewed by : | Date : | Approved by : | Drawing code : STD 216-12-01 | Sheet reference number : E - 1 | Design file no. : | Rev. | Sheet of