CORPS OF ENGINEERS | 4 | 3 | 2 | 1 | U.S. ARMY

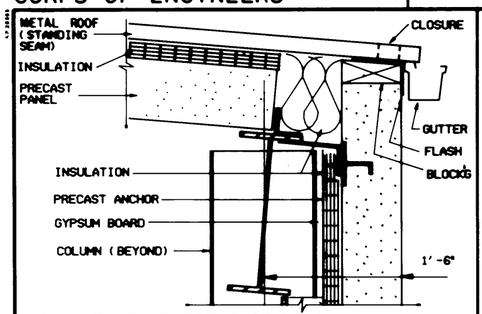

1 A-6/A-7 A-9 EAVE AT PRE-CAST WALL
SCALE: 1 1/2" = 1'-0"

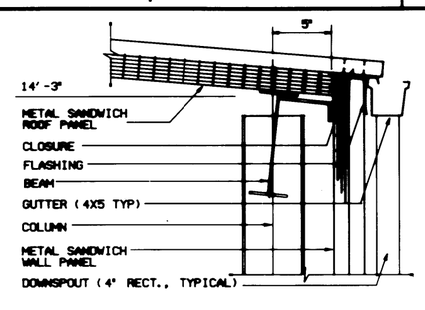

2 A-5/A-7 A-9 EAVE AT METAL PANEL
SCALE: 1 1/2" = 1'-0"

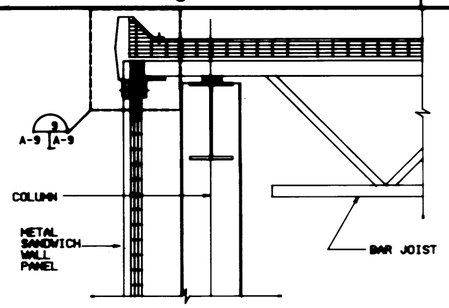

3 A-3/A-7 A-9 RAKE DETAIL
SCALE: 1 1/2" = 1'-0"

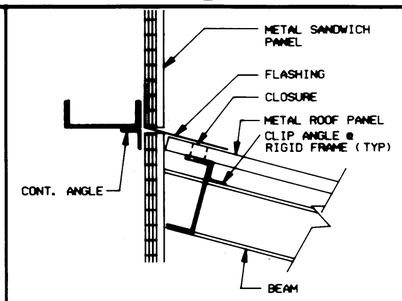

4 A-1 A-9 FLASHING @ SANDWICH PANEL
SCALE: 1 1/2" = 1'-0"

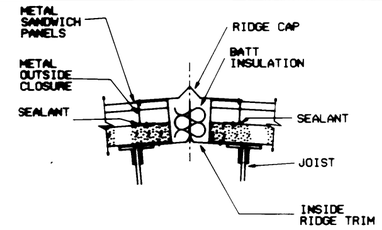

5 A-5/A-6 A-9 RIDGE DETAIL
SCALE: 1 1/2" = 1'-0"

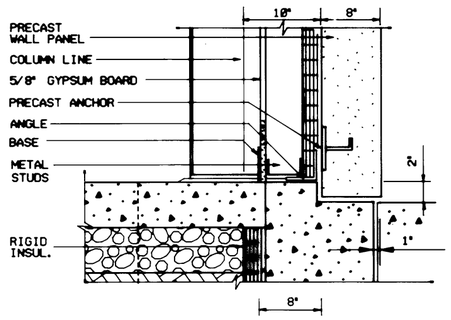

6 A-6/A-7/A-8 A-9 SILL DETAIL AT CONCRETE PANEL
SCALE: 1 1/2" = 1'-0"

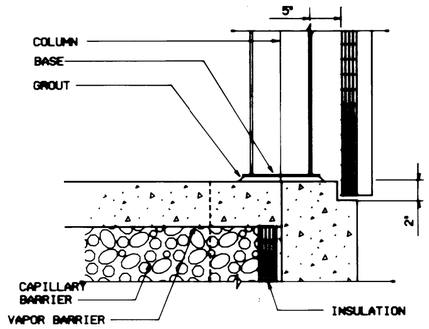

7 A-5/A-7 A-9 SILL DETAIL AT METAL PANEL
SCALE: 1 1/2" = 1'-0"

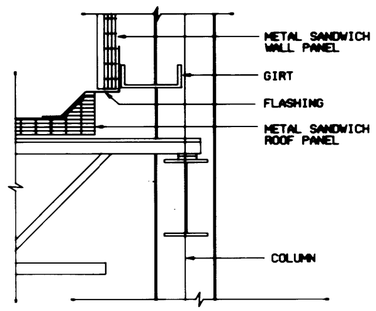

8 A-7 A-9 BASE DETAIL AT HIGH BAY
SCALE: 1 1/2" = 1'-0"

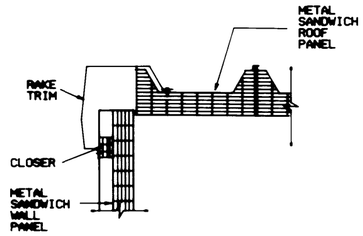

9 A-9 A-9 METAL PANEL RAKE DETAIL
SCALE: 1 1/2" = 1'-0"

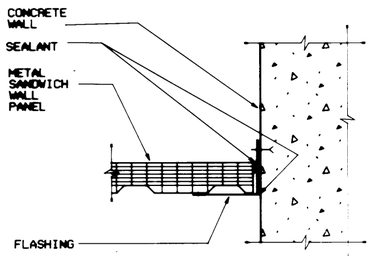

10 A-1/A-2 A-9 METAL PANEL AT CONCRETE WALL
SCALE: 3" = 1'-0"

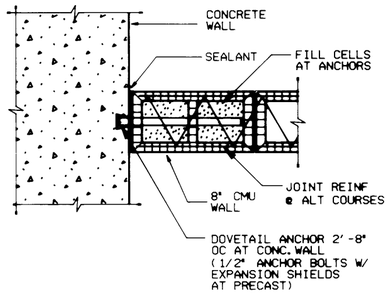

11 A-2 A-9 CMU PARTITION AT CONCRETE WALL
SCALE: 1 1/2" = 1'-0"

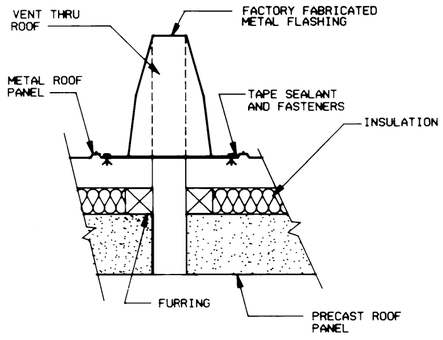

12 A-3 A-9 VENT-STACK DETAIL AT ROOF
NTS

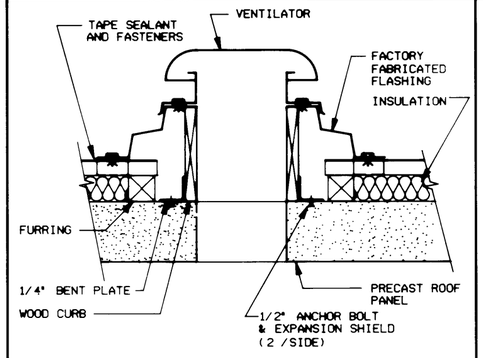

13 A-3 A-9 ROOF CURB DETAIL
SCALE: 1 1/2" = 1'-0"

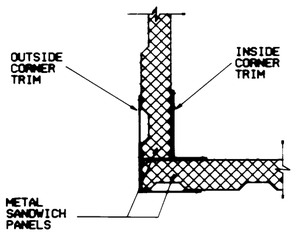

14 A-1 A-9 METAL PANEL CORNER DETAIL
SCALE: 3" = 1'-0"

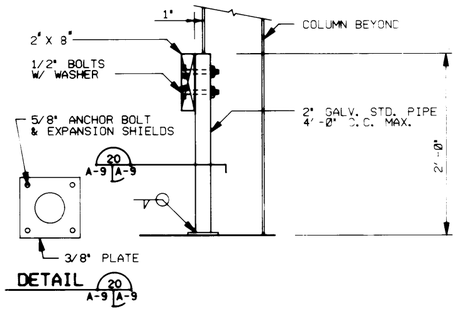

15 A-1/A-5 A-9 BUMPER DETAIL
SCALE: 1 1/2" = 1'-0"

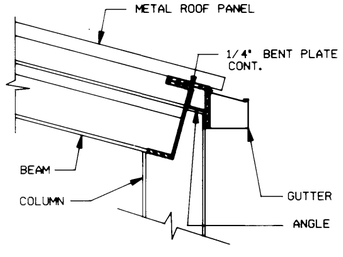

16 A-6/A-7 A-9 EAVE @ STOOP
SCALE: 1 1/2" = 1'-0"

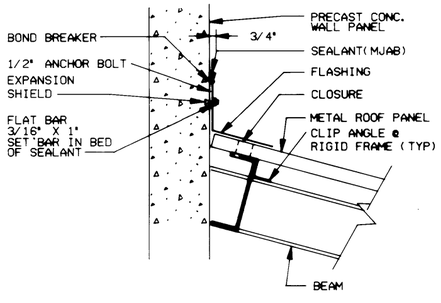

17 A-6/A-7 A-9 FLASHING @ STOOP
SCALE: 1 1/2" = 1'-0"

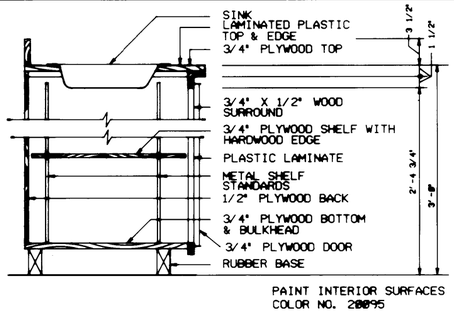

18 A-2 A-9 CABINET DETAIL
SCALE: 1 1/2" = 1'-0"

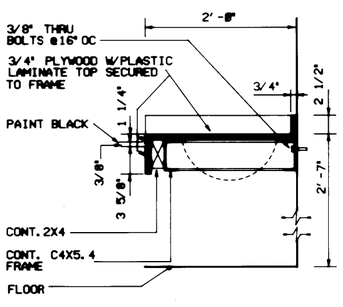

19 A-2 A-9 SECTION THRU VANITY
SCALE: 1 1/2" = 1'-0"

Symbol	Description	Date	Approved
	Revisions		

US ARMY ENGINEER DIVISION HUNTSVILLE
CORPS OF ENGINEERS
HUNTSVILLE, ALABAMA

Site adapt A/E :

US Army Corps of Engineers

STANDARD DESIGN
AMMUNITION SURVEILLANCE FACILITY
DETAILS

Dwn. by : | Ckd. by :
Reviewed by : | Date : | Sheet reference number : A-9 | Design file no. : | Rev.
Approved by : | Drawing code : STD 216-12-01 | Sheet of

5 | 4 | 3 | 2 | 1