CORPS OF ENGINEERS | U. S. ARMY

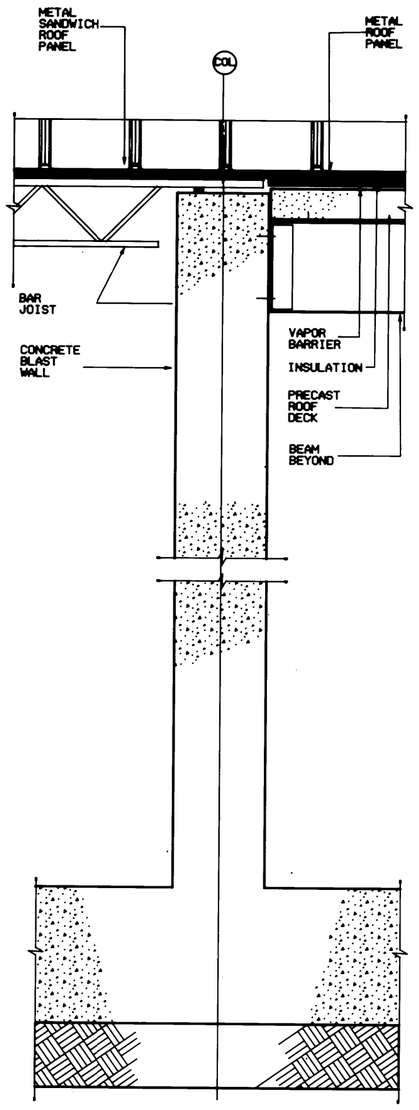

SECTION
SCALE 3/4" =1'-0" A-1/A-2 A-8

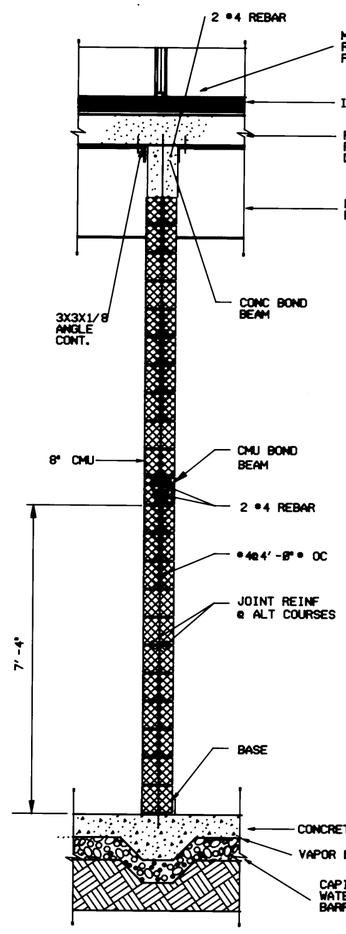

SECTION
SCALE 3/4" =1'-0" 2 A-2/A-8

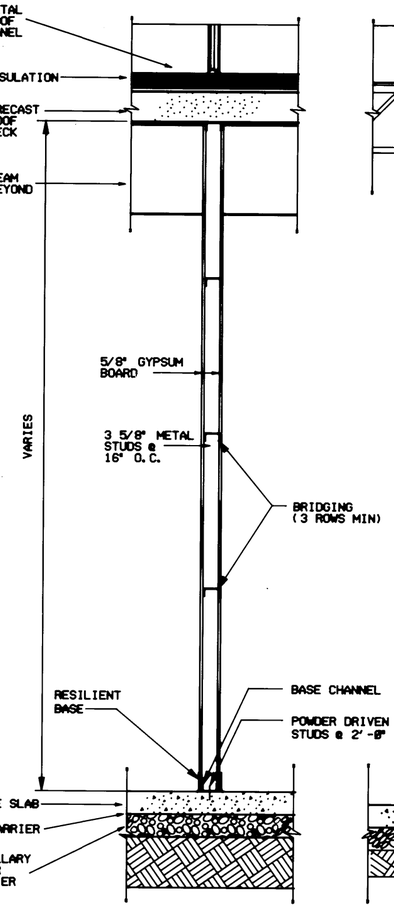

SECTION
SCALE 3/4" =1'-0" 3 A-2/A-8

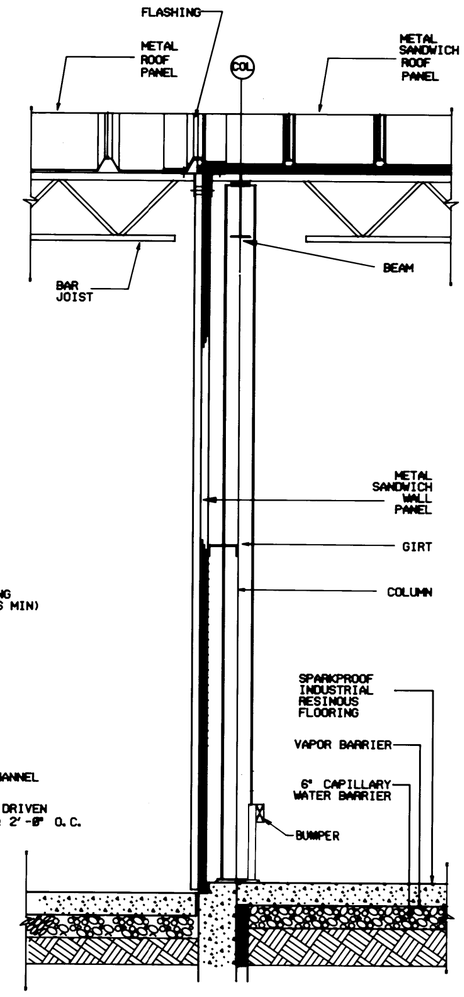

SECTION
SCALE 3/4" =1'-0" 4 A-1/A-8

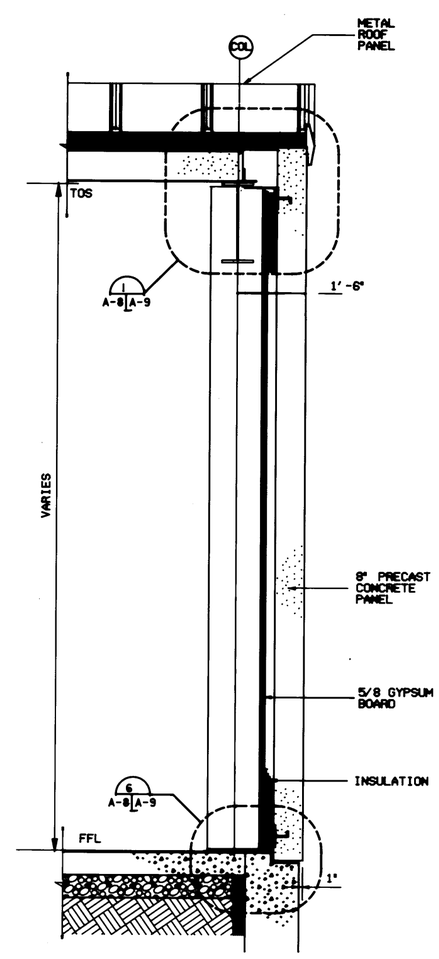

SECTION
SCALE 3/4" =1'-0" 5 A-2/A-3 A-8

0 6" 1' 2' 3' 4'
SCALE 3/4" =1'-0"

Symbol	Description	Date	Approved
	Revisions		

US ARMY ENGINEER DIVISION HUNTSVILLE
CORPS OF ENGINEERS
HUNTSVILLE, ALABAMA

Site adapt A/E :

US Army Corps of Engineers

STANDARD DESIGN
AMMUNITION SURVEILLANCE FACILITY
WALL SECTIONS

Dwn. by : Ckd. by :

Reviewed by : JFS

Date :

Sheet reference number : A-8

Design file no. :

Rev.

Approved by :

Drawing code : STD 216-12-01

Sheet of