CORPS OF ENGINEERS | 4 | 3 | 2 | 1 | U. S. ARMY

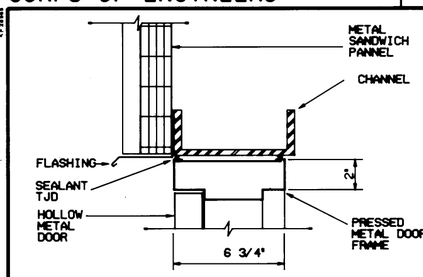

H1 A-12 A-13 HEAD @ INSUL. METAL PANEL
SCALE: 3" = 1'-0"

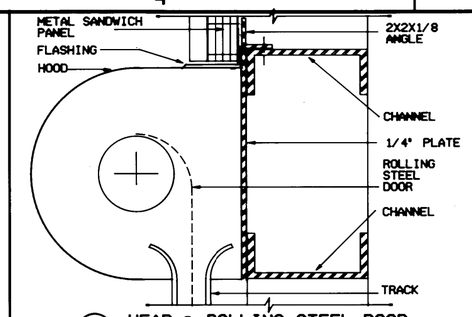

H2 A-12 A-13 HEAD @ ROLLING STEEL DOOR
SCALE: 3" = 1'-0"

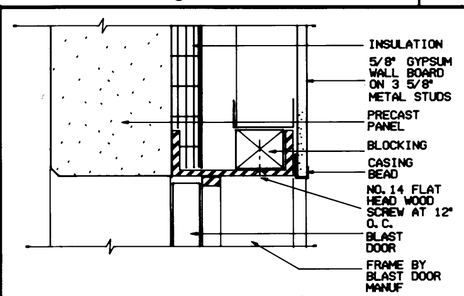

H3 A-12 A-13 HEAD @ PRECAST WALL (BLAST)
SCALE: 3" = 1'-0"

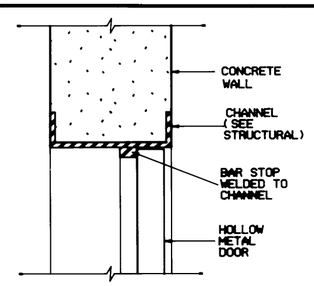

H4 A-12 A-13 HEAD @ CONCRETE WALL
SCALE: 3" = 1'-0"

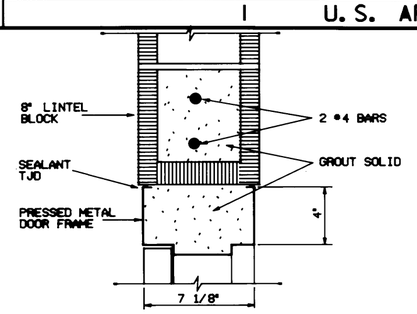

H5 A-12 A-13 HEAD @ 8" CMU
SCALE: 3" = 1'-0"

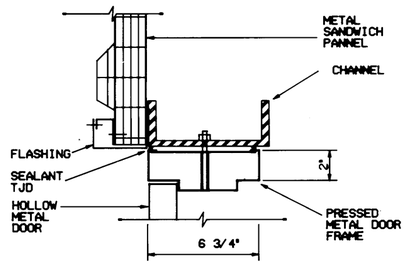

J1 A-12 A-13 JAMB @ INSUL. METAL PANEL
SCALE: 3" = 1'-0"

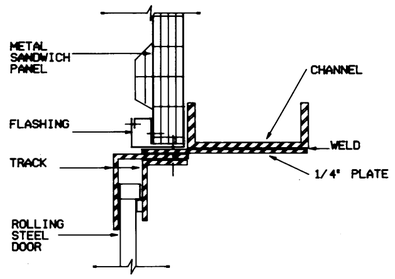

J2 A-12 A-13 JAMB @ ROLLING STEEL DOOR
SCALE: 3" = 1'-0"

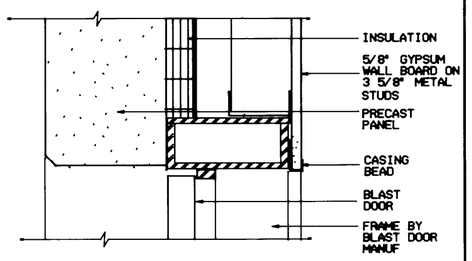

J3 A-12 A-13 JAMB @ PRECAST WALL (BLAST)
SCALE: 3" = 1'-0"

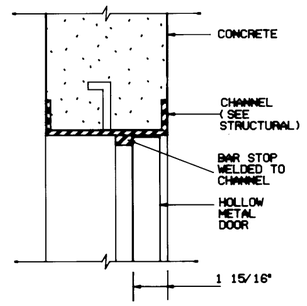

J4 A-12 A-13 JAMB @ CONCRETE WALL
SCALE: 3" = 1'-0"

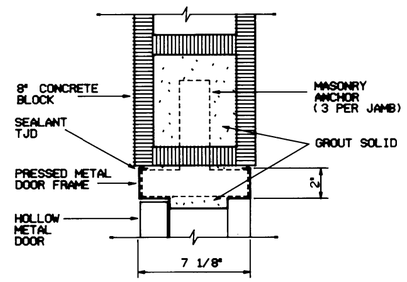

H5 A-12 A-13 JAMB @ 8" CMU
SCALE: 3" = 1'-0"

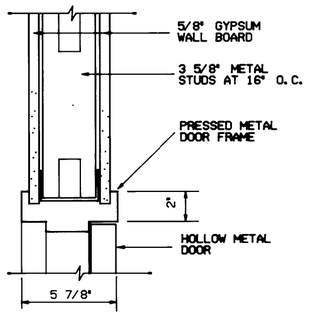

H6 A-12 A-13 HEAD @ GYPSUM WALL BOARD
SCALE: 3" = 1'-0"

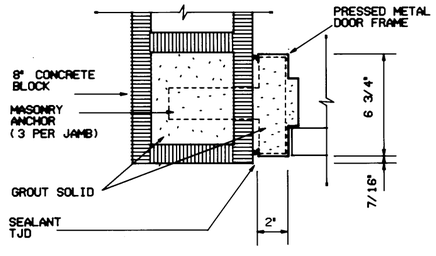

H7 A-12 A-13 HEAD @ 8" CMU END WALL
SCALE: 3" = 1'-0"

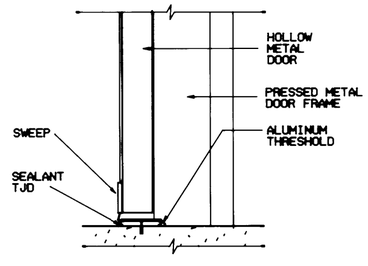

S1 A-12 A-13 SILL @ EXTERIOR DOOR
SCALE: 3" = 1'-0"

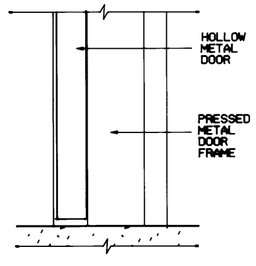

S2 A-12 A-13 SILL @ INTERIOR DOOR
SCALE: 3" = 1'-0"

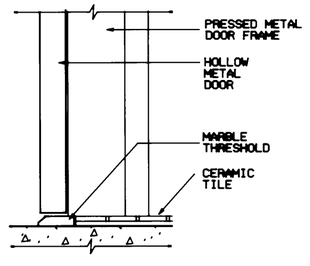

S3 A-12 A-13 SILL @ CERAMIC TILE
SCALE: 3" = 1'-0"

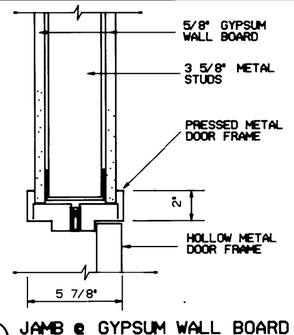

J6 A-12 A-13 JAMB @ GYPSUM WALL BOARD
SCALE: 3" = 1'-0"

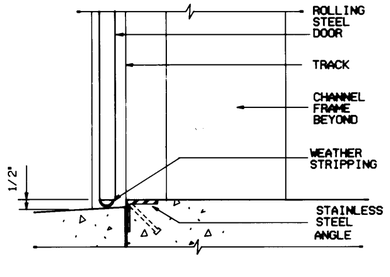

S4 A-12 A-13 SILL @ ROLLING STEEL DOOR
SCALE: 3" = 1'-0"

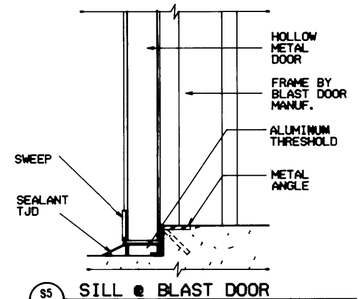

S5 A-12 A-13 SILL @ BLAST DOOR
SCALE: 3" = 1'-0"

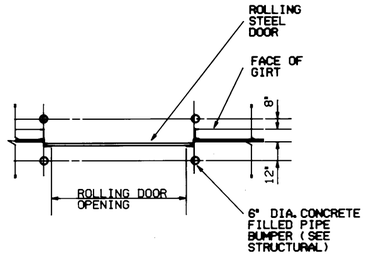

1 A-1 A-13 PIPE BUMPER LOCATION
SCALE: 1/4" = 1'-0"

Symbol	Description	Date	Approved
	Revisions		

US ARMY ENGINEER DIVISION HUNTSVILLE
CORPS OF ENGINEERS
HUNTSVILLE, ALABAMA

Site adapt A/E :

US Army Corps of Engineers

STANDARD DESIGN
AMMUNITION SURVEILLANCE FACILITY
DOOR DETAILS

Dwn. by : Ckd. by :

Reviewed by : JFS | Date : | Sheet reference number : A-13 | Design file no | Rev.

Approved by : | Drawing code : STD 216-12-01 | Sheet of

5 | 4 | 3 | 2 | 1