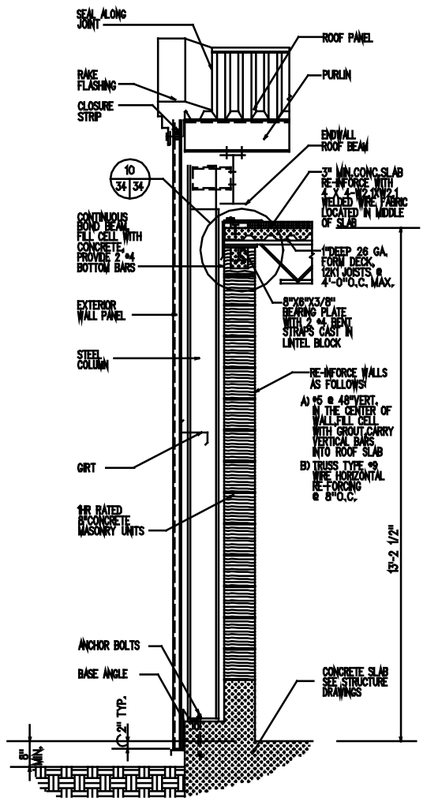

WALL SECTION THRU GABLE 1 / 33 34

SCALE 3/4"=1'-0"

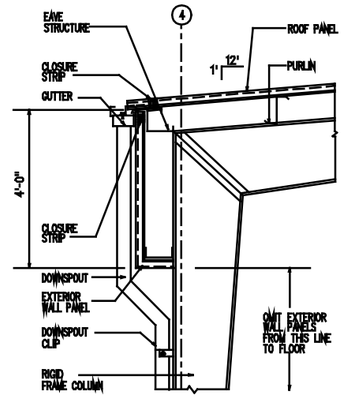

WALL SECTION AT SHED ROOF 3 / 32 34

SCALE 3/4"=1'-0"

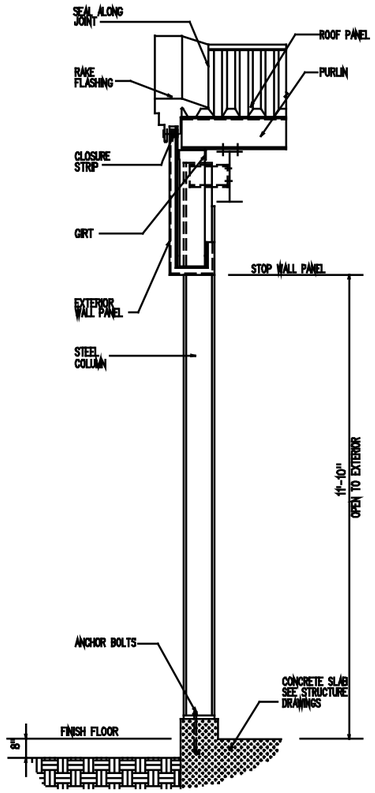

WALL SECTION THRU GABLE 6 / 32 34

SCALE 3/4"=1'-0"

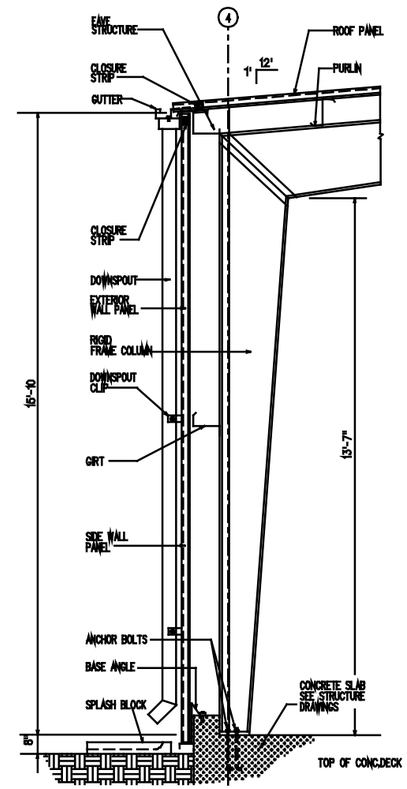

TYPICAL WALL SECTION 7 / 33 34

SCALE 3/4"=1'-0"

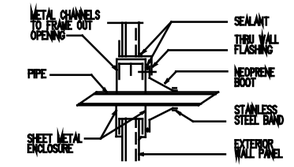

TYPICAL WALL PENETRATION DETAIL 8 / 33 34

SCALE 1 1/2"= 1'-0"

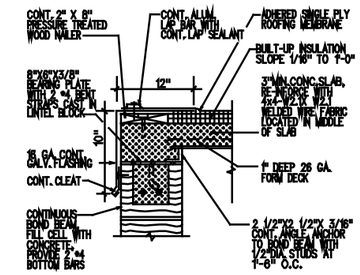

DETAIL AT CONCRETE DECK 9 / 33 34

SCALE 1 1/2"=1'-0"

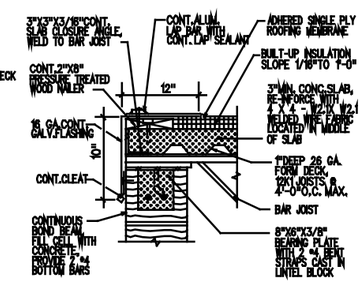

DETAIL AT CONCRETE DECK 10 / 34 34

SCALE 1 1/2"=1'-0"

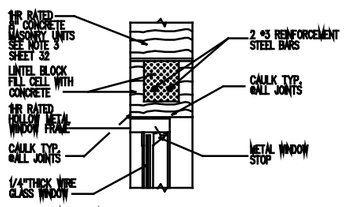

WINDOW HEAD DETAIL 2 / 34 34

SCALE 1 1/2"=1'-0"

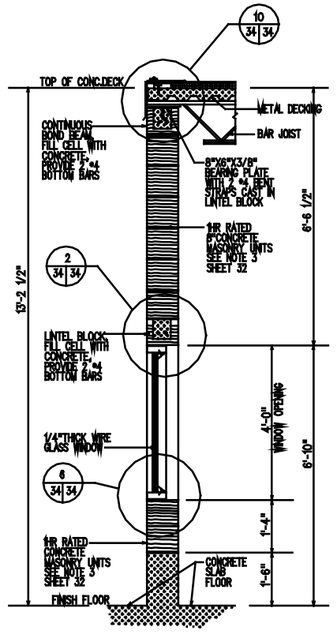

WALL SECTION THRU WINDOW 4 / 32 34

SCALE 3/4"=1'-0"

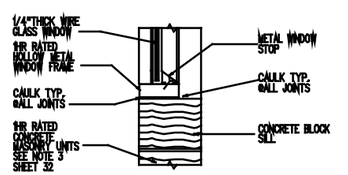

WINDOW SILL DETAIL 6 / 34 34

SCALE 1 1/2"=1'-0"

GRAPHIC SCALES

3/4"=1'-0" 12" 6" 0 1' 2' 3'

1 1/2"=1'-0" 12" 6" 0 1'

REVISION	DESCRIPTION	DATE	APPROVED

SUPERSEDES PREVIOUS EDITIONS OF THIS DRAWING

Robert and Company
Architects-Engineers-Planners
80 Peachtree Street, N.E. Atlanta, Georgia 30303

DESIGN LIEUTENANT COLONEL, USAF
DR. K.W. LEWIS
SUPV. L. BENSLEY CH. ENGR. CIVILIAN
SUBMITTED BY: DATE: 10-1-80
EIC.
BR.HD.
FPE.
APPROVED: DATE: 1/8/81
CHIEF, EFD FOR COMMANDER NAVFAC

DEPARTMENT OF THE AIR FORCE
HEADQUARTERS AIR FORCE ENGINEERING AND SERVICES CENTER
TYNDALL AIR FORCE BASE, FLORIDA

ACCEPTED: DATE: 1-22-81
USAF FUEL FACILITIES ENGINEER

APPROVED FOR CHIEF OF STAFF, U.S. AIR FORCE
CHIEF, ENGINEERING DIVISION
DATE: 1-22-81

AIR FORCE STANDARDS
AIRCRAFT DIRECT FUELING SYSTEM
TYPE IV

ARCHITECTURAL SECTIONS AND DETAILS
UNVERIFIED DRAFT

SCALE: AS NOTED
SPEC. NO. 78-24-29-00-A
SHEET 34 OF 34
DRAWING NO. AN 78-24-29