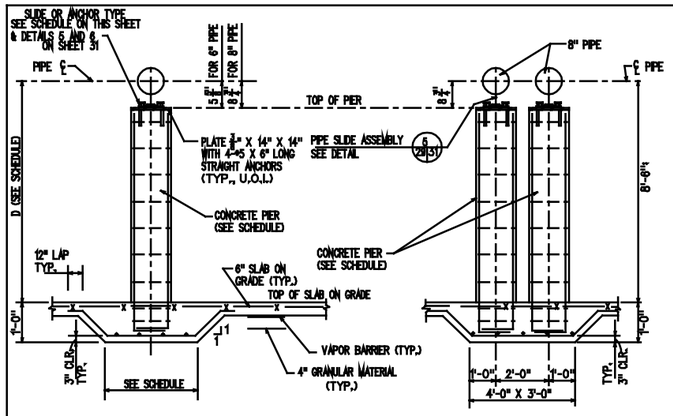

TYPICAL PIPE SUPPORT, PIER & FOOTING

SECTION 1/29 — NOT TO SCALE

SECTION 2/29 — NOT TO SCALE

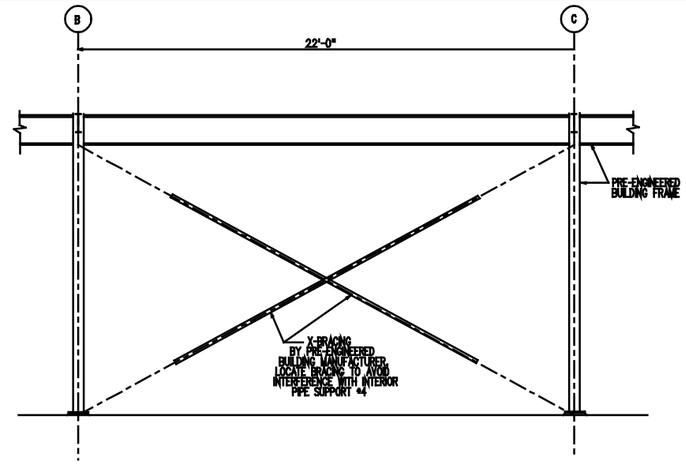

DETAIL 3/28 — SCALE 3/8" = 1'-0"

PUMP HOUSE BUILDING FOOTING & PIER SCHEDULE							
MARK	FOOTINGS		TOP OF FOOTING ELEVATION	PIERS			TOP OF PIER ELEVATION
	SIZE	REINFORCING		SIZE	REINFORCING	TIES	
F1	5'-0"Sq. x 1'-0"	5-#5 E.W., BOT.	-(3'-0")	12"x24"	6-#7 VERT.	#3 @ 12"	±(0'-0")
F2	4'-0"Sq. x 1'-0"	4-#5 E.W., BOT.	-(3'-0")	12"x24"	4-#7 VERT.	#3 @ 12"	±(0'-0")

PIPE SUPPORTS SCHEDULE									
PIPE SUPPORT #	PIPE DIAMETER	℄ PIPE ELEVATION D	PIERS			12" THICK SLAB UNDER PIERS (TYP., U.O.I.)		PIPE SUPPORT TYPE SEE DETAIL 5 & 6 ON SHT. 31	REMARKS
			SIZE	VERTICAL REINF.	TIES ☐	SIZE	REINFORCING		
1	8"	10'-6"	14"x14"	4-#7	#3 @ 12"	3'-0"Sq.	5-#5 E.W., BOT.	A	SEE SECTION 1 ON THIS SHT.
2	8"	10'-6"	14"x14"	4-#7	#3 @ 12"	3'-0"Sq.	5-#5 E.W., BOT.	B	SEE SECTION 1 ON THIS SHT.
3	8"	10'-6" 3'-0"						B	SEE SECTION 1 ON THIS SHT.
4	8"	3'-0"	14"x14"	4-#7	#3 @ 12"	3'-0"Sq.	5-#5 E.W., BOT.	C	SEE SECTION 1 ON THIS SHT.
5	4" 2"							A	SEE SECTION 10 ON THIS SHT.
6	6" 2"							A C	SEE SECTION 10 ON THIS SHT.
7	8"	3'-0"	14"x14"	4-#7	#3 @ 12"	2'-6"Sq.	5-#5 E.W., BOT.	C	SEE SECTION 1 ON THIS SHT.
8	8"	4'-0"	14"x14"	4-#7	#3 @ 12"	3'-0"Sq.	5-#5 E.W., BOT.	A	SEE SECTION 1 ON THIS SHT.
9	8"	2'-0"	14"x14"	4-#7	#3 @ 12"	3'-0"Sq.	5-#5 E.W., BOT.	C	SEE SECTION 1 ON THIS SHT.
10	12"	2'-0"	14"x14"	4-#7	#3 @ 12"	3'-0"Sq.	5-#5 E.W., BOT.	A	SEE SECTION 1 ON THIS SHT.
11	12"	2'-0"	14"x14"	4-#7	#3 @ 12"	3'-0"Sq.	5-#5 E.W., BOT.	A	SEE SECTION 1 ON THIS SHT.
12	8"	2'-0"	14"x14"	4-#7	#3 @ 12"	3'-0"Sq.	5-#5 E.W., BOT.	B	SEE SECTION 1 ON THIS SHT.
13	8"	2'-0"	14"x14"	4-#7	#3 @ 12"	3'-0"Sq.	5-#5 E.W., BOT.	B	SEE SECTION 1 ON THIS SHT.
14	METER	4'-0"	18"x18"	4-#7	#3 @ 12"	3'-0"Sq.	5-#5 E.W., BOT.		SEE SECTION 1 ON THIS SHT.
15 & 16	6"	8'-6"						B	SEE SECTION 2 ON SHT. 30
17 & 18	8"	8'-6"	14"x14"	4-#7	#3 @ 12"	3'-0"	5-#5 E.W., BOT.	B	SEE SECTION 2 ON THIS SHT.
19 & 20	8"	8'-6"	22"x44"	8-#7	2-#3@12"	5'-0" X 2'-0" THICK	10-#5 E.W. TOP & BOT.	C	SEE SECTION 9 ON THIS SHT.
21	6"	8'-6" 4'-6"				3'-0"Sq.	5-#5 E.W., BOT.	B	SEE SECTION 1 ON SHT. 30
22	8"	8'-6"						B	SEE SECTION 1 ON SHT. 30
23 THRU 25	6"	4'-6" 8'-6"						A	SEE SECTION 1 ON SHT 31
26	8"	8'-6"	14"x14"	4-#7	#3 @ 12"	3'-0"Sq.	5-#5 E.W., BOT.	B	SEE SECTION 1 ON THIS SHT.
27	6" 8"	10'-6" 3'-0"						A	SEE SECTION 1 ON SHT. 31
28	6" 8"	10'-6" 3'-0"						B A	SEE SECTION 1 ON SHT. 31
29	8"	10'-6"	14"x14"	4-#7	#3 @ 12"	3'-0"Sq.	5-#5 E.W., BOT.	A	SEE SECTION 1 ON THIS SHT.
30	6"	8'-6"						B	SEE SECTION 2 ON THIS SHT.
31	6"	4'-6" 8'-6"						A	SEE SECTION 1 ON SHT. 31
32	8"	2'-0"	14"x14"	4-#7	#3 @ 12"	3'-0"Sq.	5-#5 E.W., BOT.	B	SEE SECTION 1 ON THIS SHT.
33	8"	3'-0"	14"x14"	4-#7	#3 @ 12"	3'-0"Sq.	5-#5 E.W., BOT.	A	SEE SECTION 1 ON THIS SHT.
34	6"	8'-6"						B	SEE SECTION 1 ON
35	6"	8'-6"						B	SHEET 30

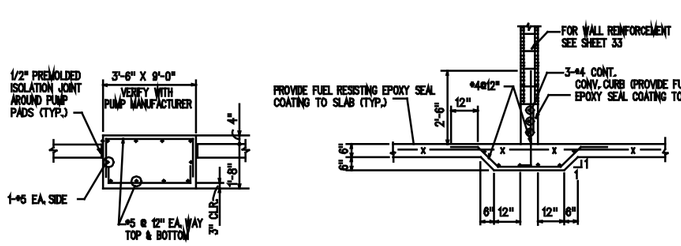

TYPICAL PUMP PAD DETAIL 4/30 — SCALE: 1/2" = 1'-0"

SECTION 5/28 — SCALE 1" = 1'-0"

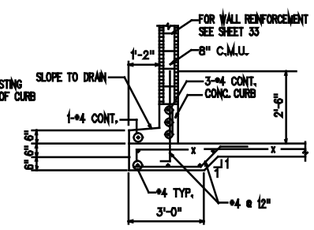

SECTION 6/28 — SCALE 1" = 1'-0"

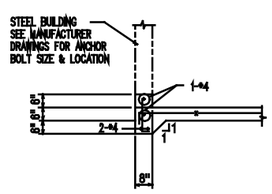

SECTION 7/28 — SCALE 1" = 1'-0"

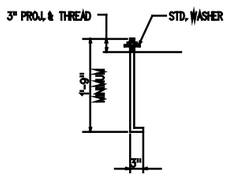

NOTE:
THIS DETAIL FOR PRE-ENGINEERED BUILDING COLUMNS ONLY.
FOR ANCHOR BOLT LOCATION & SIZE SEE PRE-ENGINEERED BUILDING MANUFACTURER RECOMMENDATIONS

TYPICAL ANCHOR BOLT DETAIL 8/29 — SCALE: 1/2" = 1'-0"

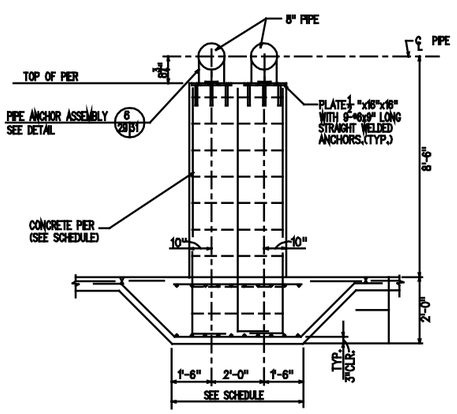

SECTION 9/29 — NOT TO SCALE

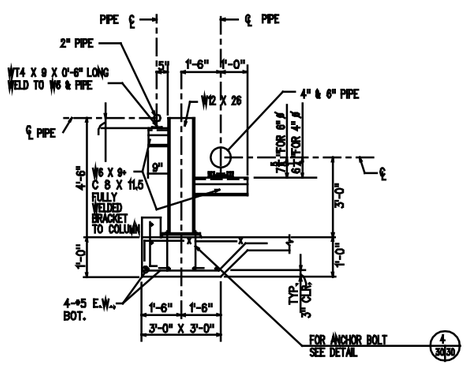

SECTION 10/28 — NOT TO SCALE

REVISION	DESCRIPTION	DATE	APPROVED

SUPERSEDES PREVIOUS EDITIONS OF THIS DRAWING

Robert and Company
Architects-Engineers-Planners
CH, A. DIBBLE
K. KING
SUPV. CH. ENGR.
L. MEADLEY A. DIBBLE
SUBMITTED BY: DATE: 12-7-80
EIC.
BR.HD.
FPE.
APPROVED: DATE: 1/8/81
EFD FOR COMMANDER HAWFAC

DEPARTMENT OF THE AIR FORCE
ACCEPTED: DATE: 1-22-81
USAF FUEL FACILITIES ENGINEER
APPROVED FOR CHIEF OF STAFF, U.S. AIR FORCE
CHIEF, ENGINEERING DIVISION DATE: 1-22-81

AIR FORCE STANDARDS
AIRCRAFT DIRECT FUELING SYSTEM
TYPE IV

UNVERIFIED DRAFT
PIPE SUPPORT
SECTION, DETAILS & SCHEDULES

SCALE: AS NOTED
SPEC. NO. 78-21-29-00-AF
SHEET 29
DRAWING NO. AF 78-24-29