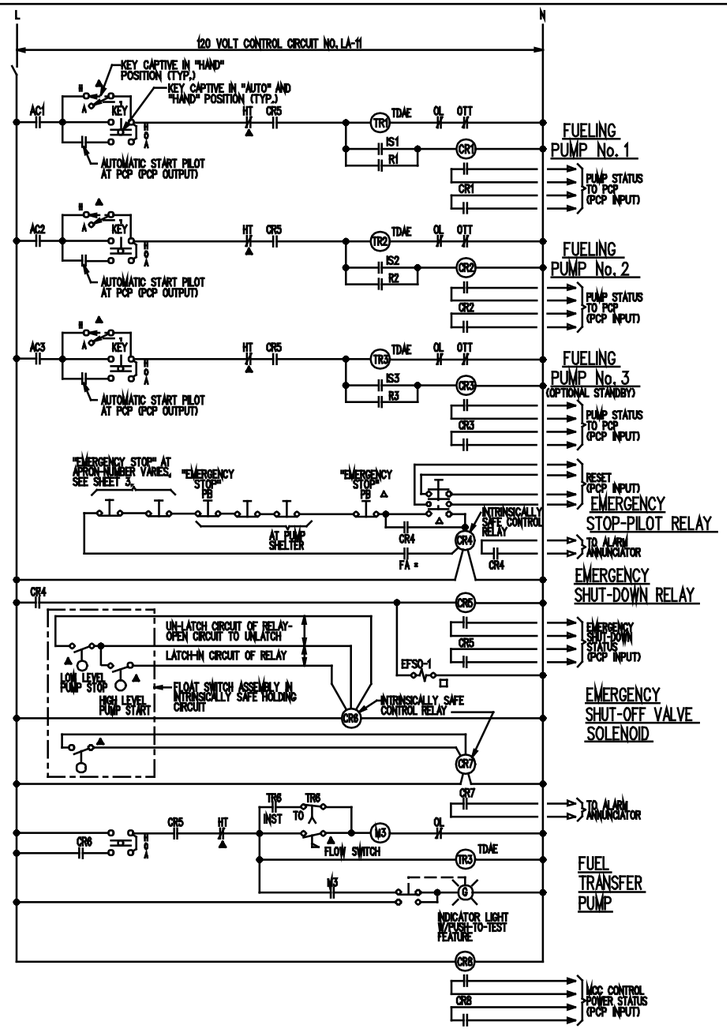

LOW VOLTAGE MOTOR CONTROL CENTER
WIRING & INTERCONNECTION DIAGRAM

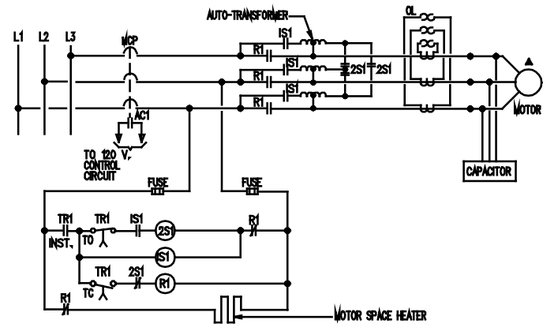

ELEMENTARY CONTROL DIAGRAM
FUELING PUMP NO.1
(SIMILAR FOR ALL FUELING PUMPS)

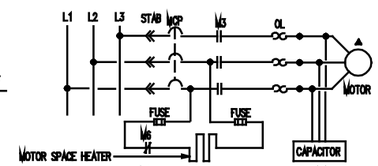

ELEMENTARY CONTROL DIAGRAM
FUEL TRANSFER PUMP

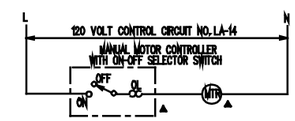

ELEMENTARY CONTROL DIAGRAM
PRODUCT RETURN PUMP (PRP-1)
(SIMILAR FOR PRODUCT RETURN PUMP PRP-2 EXCEPT CONNECT TO CIRCUIT NO. LA-16)

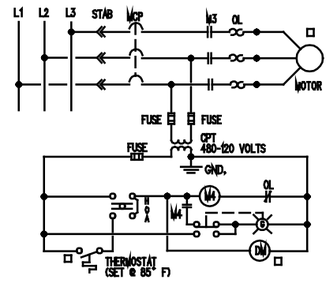

ELEMENTARY CONTROL DIAGRAM
PUMP HOUSE EXHAUST FAN (EF-1)

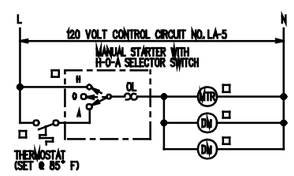

ELEMENTARY CONTROL DIAGRAM
CONTROL ROOM SUPPLY FAN (SF-1)

ABBREVIATIONS	
CPT	CONTROL POWER TRANSFORMER
GND	GROUND
INST	INSTANTANEOUS
MTR	MOTOR
MCC	MOTOR CONTROL CENTER
MCP	MOTOR CIRCUIT PROTECTOR
OL	OVERLOAD
PB	PUSHBUTTON
PCP	PUMP CONTROL PANEL
TC	TIMED CLOSE
TO	TIMED OPEN
TDAE	TIME DELAY AFTER ENERGIZATION

GENERAL NOTES (THIS SHEET ONLY):

1. UNLESS OTHERWISE INDICATED, DEVICES ARE LOCATED AT THE MOTOR CONTROL CENTER.
2. KEY LOCKS FOR LOCAL SELECTOR SWITCH AND CORRESPONDING MCC SELECTOR SWITCH SHALL BE KEYED ALIKE.
   KEY LOCKS FOR LOCAL SELECTOR SWITCH AND NON-CORRESPONDING MCC SELECTOR SWITCH SHALL NOT BE KEYED ALIKE.

CONTROL DIAGRAM LEGEND	
SYMBOL	DESCRIPTION
CR	CONTROL RELAY MAGNETIC COIL
CR	CONTROL RELAY CONTACT, NORMALLY OPEN
CR	CONTROL RELAY CONTACT, NORMALLY CLOSED
S	STARTED RELAY COIL
S	STARTING RELAY CONTACTS
R	RUN RELAY COIL
R	RUN RELAY CONTACTS
TR	TIME DELAY RELAY COIL OR SOLENOID
TRI INST.	TIME DELAY RELAY CONTACT, INSTANT CLOSE
TRI TO	TIME DELAY RELAY CONTACT, TIMED OPEN
TRI TC	TIME DELAY RELAY CONTACT, TIMED CLOSE
Ac	AUXILLARY CONTACT ON STARTER MCP
OL	OVERLOAD CONTACT
MT	MOTOR FRAME HIGH TEMPERATURE CONTACT
FA	FIRE ALARM PANEL CONTROL CONTACT
OTT	OVERTEMPERATURE THERMOSTAT FOR AUTO-TRANSFORMER WINDING
	MOMENTARY CONTACT PUSHBUTTON, NORMALLY OPEN
	MOMENTARY CONTACT PUSHBUTTON, NORMALLY CLOSE
	LEVEL SWITCH, CLOSES AT SET POINT ON INCREASING LEVEL
	FLOW SWITCH, OPENS AT SET POINT ON INCREASING FLOW
	FLOW SWITCH, CLOSES AT SET POINT ON INCREASING FLOW
	THERMOSTAT, CLOSES ON RISING TEMPERATURE AT SET POINT
DM	DAMPER MOTOR
	INDICATES FIELD WIRING
	INDICATES FACTORY WIRING
	INDICATES MECHANICAL INTERCONNECTION
▲	INDICATES DEVICE NEAR ASSOCIATED PUMP
△	INDICATES DEVICE AT PCP
*	INDICATES DEVICE AT FIRE ALARM PANEL
□	INDICATES REMOTE DEVICE
H O A OR H O A	HAND-OFF-AUTOMATIC SELECTOR SWITCH

INDICATOR LIGHT - "G"-GREEN, "R"-RED, "A"-AMBER

REVISION	DESCRIPTION	DATE	APPROVED

SUPERSEDES PREVIOUS EDITIONS OF THIS DRAWING

Robert and Company
Architects-Engineers-Planners
30 Peachtree Street, N.E., Atlanta, Georgia 30303

DESIGN LEADERSHIP: CHK.
IDP: LA 8000
SUPV.: CH. ENGR.
DWN.: WEBLEY
SUBMITTED BY: DATE: 22-1-80
EIC:
BR.HD.:
FPE:
APPROVED: DATE: 1/8/81
EFD FOR COMMANDER NAFAC

DEPARTMENT OF THE AIR FORCE
HEADQUARTERS TWELFTH AIR FORCE
MATHER AIR FORCE BASE
SACRAMENTO, CALIFORNIA

ACCEPTED: DATE: 1-22-81
USAF FUEL FACILITIES ENGINEER
APPROVED FOR CHIEF OF STAFF, U.S. AIR FORCE
CHIEF, ENGINEERING DIVISION
DATE: 1-22-81

AIR FORCE STANDARDS
AIRCRAFT DIRECT FUELING SYSTEM
TYPE IV

UNVERIFIED DRAFT
WIRING DIAGRAMS

SCALE: NO SCALE
SPEC. NO. 78-24-29-00-AF
SHEET 26
DRAWING NO. AF 78-24-29