FUELING SYSTEM FIELD INPUT DEVICE - DISCRETE

(CONNECTING LINES DEPICT INPUT/OUTPUT RELATIONSHIPS (SEE NOTE 2))

DESCRIPTION	SYMBOL
EMERGENCY STOP STATUS RELAY IN MCC (CONNECT ONE CONTACT TO EACH OF SYSTEM 1 & SYSTEM 2 SERICAL INTERFACE)	CR5
FULEING PUMP NO.1 STATUS RELAY IN MCC (CONNECT ONE CONTACT TO EACH OF SYSTEM 1 & SYSTEM 2 SERIAL INTERFACE)	CR1
FULEING PUMP NO.2 STATUS RELAY IN MCC (CONNECT ONE CONTACT TO EACH OF SYSTEM 1 & SYSTEM 2 SERIAL INTERFACE)	CR2
FUELING PUMP NO.3 (OPTIONAL STANDBY) STATUS RELAY IN MCC (CONNECT ONE CONTACT TO EACH OF SYSTEM 1 & SYSTEM 2 SERIAL INTERFACE)	CR3
MCC CONTROL POWER STATUS (CONNECT ONE CONTACT TO EACH OF SYSTEM 1 & SYSTEM 2 SERIAL INTERFACE)	CR8
FLOW SWITCH AT FULEING PUMP NO.1 (CONNECT ONE CONTACT TO EACH OF SYSTEM 1 & SYSTEM S SERIAL INTERFACE)	
FLOW SWITCH AT FULEING PUMP NO.2 (CONNECT ONE CONTACT TO EACH OF SYSTEM 1 & SYSTEM 2 SERIAL INTERFACE)	
FLOW SWITCH AT FULEING PUMP NO.3 (OPTIONAL STANDBY, CONNECT ONE CONTACT TO EACH OF SYSTEM 1 & SYSTEM 2 SERIAL INTERFACE)	
LIMIT SWITCH AT RECEIVING FILTER/SEPARATOR BYPASS VALVE	
CLOSED LIMIT SWITCH AT OPERATING TANK NO.1 OUTLET VALVE	
CLOSED LIMIT SWITCH AT OPERATING TANK NO.2 OUTLET VALVE	
CLOSED LIMIT SWITCH AT PRODUCT RECOVERY TANK OVERFILL VALVE	
"START" - "STOP" PUSHBUTTON AT DIRECT FUELING STATION NO.1 (SCHEME "A" ONLY)	
"START" - "STOP" PUSHBUTTON AT DIRECT FUELING STATION NO.2 (SCHEME "A" ONLY)	
"START" - "STOP" PUSHBUTTON AT DIRECT FUELING STATION NO.3 (SCHEME "A" ONLY)	
"START" - "STOP" PUSHBUTTON AT DIRECT FUELING STATION NO.4 (SCHEME "A" ONLY)	

PCP OUTPUTS

SYMBOL	DESCRIPTION
	FUELING PUMP NO.1 AUTOMATIC START PILOT TO MCC
G	FUELING PUMP NO.1 "RUN" INDICATOR AT GRAPHICS PANEL
R	FUELING PUMP NO.1 "STOP" INDICATOR AT GRAPHICS PANEL
	FUELING PUMP NO.2 AUTOMATIC START PILOT TO MCC
G	FUELING PUMP NO.2 "RUN" INDICATOR AT GRAPHICS PANEL
R	FUELING PUMP NO.2 "STOP" INDICATOR AT GRAPHICS PANEL
	FUELING PUMP NO.3 (OPTIONAL STANDBY) AUTOMATIC START PILOT TO MCC
G	FUELING PUMP NO.3 (OPTIONAL STANDBY) "RUN INDICATOR AT GRAPHICS PANEL
R	FUELING PUMP NO.3 (OPTIONAL STANDBY) "STOP" INDICATOR AT GRAPHICS PANEL
G	EMERGENCY SHUT-OFF VALVE "OPEN" INDICATOR AT GRAPHICS PANEL
R	EMERGENCY SHUT-OFF VALVE "CLOSED" INDICATOR AT GRAPHICS PANEL
	PRESSURE CONTROL VALVE SOLENOID (ENERGIZE TO CLOSE, DE-ENERGIZE TO ENABLE) (SCHEME "B" ONLY)
A	PRESSURE CONTROL VALVE "ENABLED" INDICATOR AT GRAPHICS PANEL (SCHEME "B" ONLY)
R	PRESSURE CONTROL VALVE "CLOSED" INDICATOR AT GRAPHICS PANEL (SCHEME "B" ONLY)
	BACK PRESSURE CONTROL VALVE SOLENOID "A" (DE-ENERGIZE TO CLOSE, ENERGIZE TO ENABLE)
A	BACK PRESSURE CONTROL VALVE "ENABLED" INDICATOR AT GRAPHICS PANEL
R	BACK PRESSURE CONTROL VALVE "CLOSED" INDICATOR AT GRAPHICS PANEL
V	"POWER ON" INDICATOR AT PUMP CONTROL PANEL
	BACK PRESSURE CONTROL VALVE SOLENOID "B" (ENERGIZE TO OPEN, DE-ENERGIZE SEE SHEET 8)
G	BACK PRESSURE CONTROL VALVE "OPEN" INDICATOR AT GRAPHICS PANEL
	SYSTEM 1 FAULT TO ANNUNCIATOR
	SYSTEM 2 FAULT TO ANNUNCIATOR
G	RECEIVING FILTER/SEPARATOR BYPASS VALVE "OPEN" INDICATOR AT GRAPHICS PANEL
R	RECEIVING FILTER/SEPARATOR BYPASS VALVE "CLOSED" INDICATOR AT GRAPHICS PANEL
G	OPERATING TANK NO.1 OUTLET VALVE "OPEN" INDICATOR AT GRAPHICS PANEL
R	OPERATING TANK NO.1 OUTLET VALVE "CLOSED" INDICATOR AT GRAPHICS PANEL
G	OPERATING TANK NO.2 OUTLET VALVE "OPEN" INDICATOR AT GRAPHICS PANEL
R	OPERATING TANK NO.2 OUTLET VALVE "CLOSED" INDICATOR AT GRAPHICS PANEL
G	PRODUCT RECOVERY TANK OVERFILL VALVE "OPEN" INDICATOR AT GRAPHICS PANEL
R	PRODUCT RECOVERY TANK OVERFILL VALVE "CLOSED" INDICATOR AT GRAPHICS PANEL
	PRODUCT RECOVERY TANK OVERFILL VALVE "CLOSED" TO ANNUNCIATOR
G	FLUSHING VALVE "OPEN" INDICATOR AT GRAPHICS PANEL
R	FLUSHING VALVE "CLOSED" INDICATOR AT GRAPHICS PANEL
	FLUSHING VALVE, ENERGIZE TO CLOSE, DE-ENERGIZE TO OPEN
G	"RUN" INDICATOR AT DIRECT FUELING STATION NO.1 (SCHEME "A" ONLY)
G	"RUN" INDICATOR AT DIRECT FUELING STATION NO.2 (SCHEME "A" ONLY)
G	"RUN" INDICATOR AT DIRECT FUELING STATION NO.3 (SCHEME "A" ONLY)
G	"RUN" INDICATOR AT DIRECT FUELING STATION NO.4 (SCHEME "A" ONLY)

FUELING SYSTEM FIELD DEVICE - ANALOG (4-20MA) OR DIGITIZED INPUT

(CONNECTING LINES DEPICT INPUT/OUTPUT RELATIONSHIPS (SEE NOTE 2))

DESCRIPTION	SYMBOL
DIFFERENTIAL PRESSURE TRANSMITTER (DPT1) AT ISSUE VENTURI (CONNECT TO SYSTEM 1 MICRO-PROCESSOR CONTROLLER)	DPT1
DIFFERENTIAL PRESSURE TRANSMITTER (DPT2) AT ISSUE VENTURI (CONNECT TO SYSTEM 2 MICRO-PROCESSOR CONTROLLER)	DPT2
LOW RANGE DIFFERENTIAL PRESSURE TRANSMITTER (DPT3L) AT RETURN VENTURI (CONNECT TO SYSTEM 1 MICRO-PROCESSOR CONTROLLER)	DPT3L
HIGH RANGE DIFFERENTIAL PRESSURE TRANSMITTER (DPT3H) AT RETURN VENTURI (CONNECT TO SYSTEM 1 MICRO-PROCESSOR CONTROLLER)	DPT3H
LOW RANGE DIFFERENTIAL PRESSURE TRANSMITTER (DPT4L) AT RETURN VENTURI (CONNECT TO SYSTEM 2 MICRO-PROCESSOR CONTROLLER)	DPT4L
HIGH RANGE DIFFERENTIAL PRESSURE TRANSMITTER (DPT4H) AT RETURN VENTURI (CONNECT TO SYSTEM 2 MICRO-PROCESSOR CONTROLLER)	DPT4H
LEVEL TRANSMITTER AT OPERATING TANK NO.1 (INPUT TO BOTH MICRO-PROCESSOR CONTROLLERS)	LI1
LEVEL TRANSMITTER AT OPERATING TANK NO.2 (INPUT TO BOTH MICRO-PROCESSOR CONTROLLERS)	LI2
LEVEL TRANSMITTER AT PRODUCT RECOVERY TANK (INPUT TO BOTH MICRO-PROCESSOR CONTROLLERS)	LI3
PRESSURE INDICATING TRANSMITTER (PIT1) (CONNECT TO SYSTEM 1 MICRO-PROCESSOR CONTROLLER)	PIT1
PRESSURE INDICATING TRANSMITTER (PIT2) (CONNECT TO SYSTEM 2 MICRO-PROCESSOR CONTROLLER)	PIT2
POSITIVE DISPLACEMENT FUEL METER TRANSMITTER	MT

PCP OUTPUTS

SYMBOL	DESCRIPTION
	ISSUE VENTURI FLOW IN GPM TO RECORDER
	RETURN VENTURI FLOW IN GPM TO RECORDER
	SYSTEM PRESSURE IN PSIG TO RECORDER
88.8	OPERATING TANK NO.1 LEVEL IN FEET AT GRAPHICS PANEL
88.8	OPERATING TANK NO.2 LEVEL IN FEET AT GRAPHICS PANEL
18.8	PRODUCT RECOVERY TANK LEVEL IN FEET AT GRAPHICS PANEL
R	TANK NO.1 "LOW LEVEL" INDICATOR AT GRAPHICS PANEL
R	TANK NO.1 "HIGH LEVEL" INDICATOR AT GRAPHICS PANEL
R	TANK NO.1 "HIGH-HIGH LEVEL" INDICATOR AT GRAPHICS PANEL
	TANK NO.1 "HIGH-HIGH" LEVEL TO ALARM ANNUNCIATOR
	TANK NO.1 "LOW LEVEL" TO ALARM ANNUNCIATOR
R	TANK NO.2 "LOW LEVEL" INDICATOR AT GRAPHICS PANEL
R	TANK NO.2 "HIGH LEVEL" INDICATOR AT GRAPHICS PANEL
R	TANK NO.2 "HIGH-HIGH LEVEL" INDICATOR AT GRAPHICS PANEL
	TANK NO.2 "HIGH-HIGH" LEVEL TO ALARM ANNUNCIATOR
	TANK NO.2 "LOW LEVEL" TO ALARM ANNUNCIATOR
	PUMP NO.1 FAILURE TO ANNUNCIATOR
	PUMP NO.2 FAILURE TO ANNUNCIATOR
	ALPHA-NUMERIC DISPLAY
	TOTALIZED GALLONS THROUGH POSITIVE DISPLACEMENT FUEL METER

OPERATOR CONTROL INPUTS AT PCP

DESCRIPTION	SYMBOL	DESTINATION
GRAPHIC DISPLAY "LAMP TEST" PUSHBUTTON		PCP
"REFUEL - LOOP FLUSH - PANTOGRAPH FLUSH" SELECTOR SWITCH		PCP
"LEAD PUMP" SELECTOR SWITCH		PCP
"RESET PUSHBUTTON		PCP / MCC
ANNUNCIATOR "TEST" PUSHBUTTON		ANNUNCIATOR
ANNUNCIATOR "RESET" PUSHBUTTON		ANNUNCIATOR
ANNUNCIATOR "ACKNOWLEDGE" PUSHBUTTON		ANNUNCIATOR

MISCELLANEOUS INPUTS

SYMBOL	DESCRIPTION
CR5	EMERGENCY STOP PILOT RELAY AT MCC
	ENGINE GENERATOR FAULT ALARM CONTACT FROM GENERATOR REMOTE ALARM PANEL
CR7	PRODUCT RECOVERY TANK HIGH LEVEL
	PRODUCT RECOVERY TANK LEAK DETECTOR
	OIL/WATER SEPARATOR HIGH LEVEL

CONTROL PARAMETER SETTING INPUT DEVICES AT PCP

DESCRIPTION	SYMBOL	DESTINATION
"ADDRESS" THUMBWHEEL SWITCH		PCP
"DATA" THUMBWHEEL SWITCH		PCP
"DISPLAY" PUSHBUTTON		PCP
"EXECUTE" PUSHBOTTON		PCP

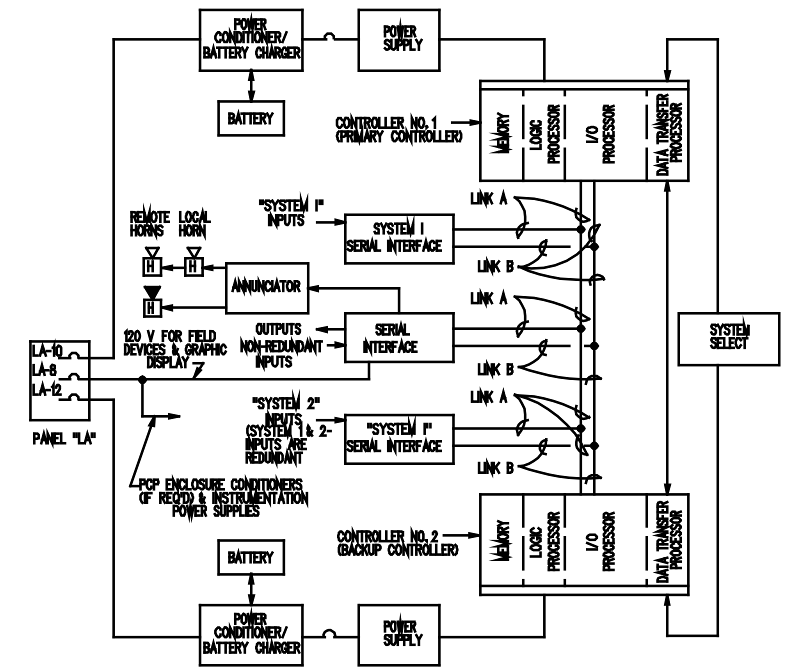

NOTES:

A. LINKS BETWEEN I/O PROCESSORS AND SERIAL INERFACES SHALL BE REDUNDANT, AS INDICATED, (E.G. LINK A AND LINK B) TO PROTECT AGAINST DOWN TIME DUE TO FAULT IN LINK A OR LINK B.

B. SYSTEM 1 SERIAL INTERFACE SHALL BE UTILIZED BY BOTH CONTROLERS UNLESS SYSTEM 1 SERIAL INTERFACE IS DISABLED OR UNLESS CONTROLLER NO.2 IS SELECTED MANUALLY, IF CONTROLLER NO.2 IS SELECTED MANUALLY & SYSTEM 2 SERIAL INTERFACE IS OPERABLE, SYSTEM 2 SERIAL INTERFACE SHALL BE UTILIZED.

CONTROL SYSTEM BLOCK DIAGRAM

NOTES:

1. THE INPUT/OUTPUT DIAGRAMS ARE INTENDED TO DEPICT THE DEVICES FROM WHICH INFORMATION IS RECEIVED AND TO WHICH COMMANDS ARE TRANSMITTED.
2. LINES INTERCONNECTING INPUT AND OUTPUT DEVICES INDICATE THAT THE STATE OF ASSOCIATED INPUT HAS A DIRECT EFFECT ON THE STATE OF THE ASSOCIATED OUTPUT DEVICE. RELATIONSHIPS ARE NOT DEPICTED BETWEEN INPUT AND OUTPUT DEVICES WHICH AFFECT ONE ANOTHER CONTINGENT UPON STATUS OF MULTIPLE INPUTS, OUTPUTS, AND/OR TIMERS. THEREFORE, THESE DIAGRAMS DO NOT DEFINE ALL CONTROL FUNCTIONS AND THEY SHALL BE VIEWED IN CONJUNCTION WITH THE CONTROL SEQUENCE REQUIREMENTS PRESENTED IN THE SPECIFICATIONS AND SHEET 6 OR 8 AS APPLICABLE.
3. THE WORK "ENABLED" AS USED ON THIS SHEET REFERS TO THAT OPERATING STATE OF THE VALVE SOLENOID WHICH ALLOWS HYDRAULIC MODULATION OR CONTROL OF THE VALVE.

REVISION	DESCRIPTION	DATE	APPROVED

SUPERSEDES PREVIOUS EDITIONS OF THIS DRAWING

Robert and Company — Architects-Engineers-Planners

DSGN. L. HENDERSON CHK. ____ DR. COBB

SUPV. L. BEASLEY CH. ENGR. P. T. HICKS

SUBMITTED BY: DATE: 12-1-90

EIC. ____ BR.HD. ____ FPE. ____

APPROVED: DATE: 1/8/91 EFD FOR COMMANDER NAVFAC

DEPARTMENT OF THE AIR FORCE

ACCEPTED: DATE: 1-22-91 USAF FUEL FACILITIES ENGINEER

APPROVED FOR CHIEF OF STAFF, U.S. AIR FORCE

CHIEF, ENGINEERING DIVISION DATE: 1-22-91

AIR FORCE STANDARDS AIRCRAFT DIRECT FUELING SYSTEM TYPE IV

UNVERIFIED DRAFT

I/O DIAGRAM

SCALE: NO SCALE — SPEC. NO. 78-24-29-85-AF

SHEET 25 — DRAWING NO. AW 78-24-29