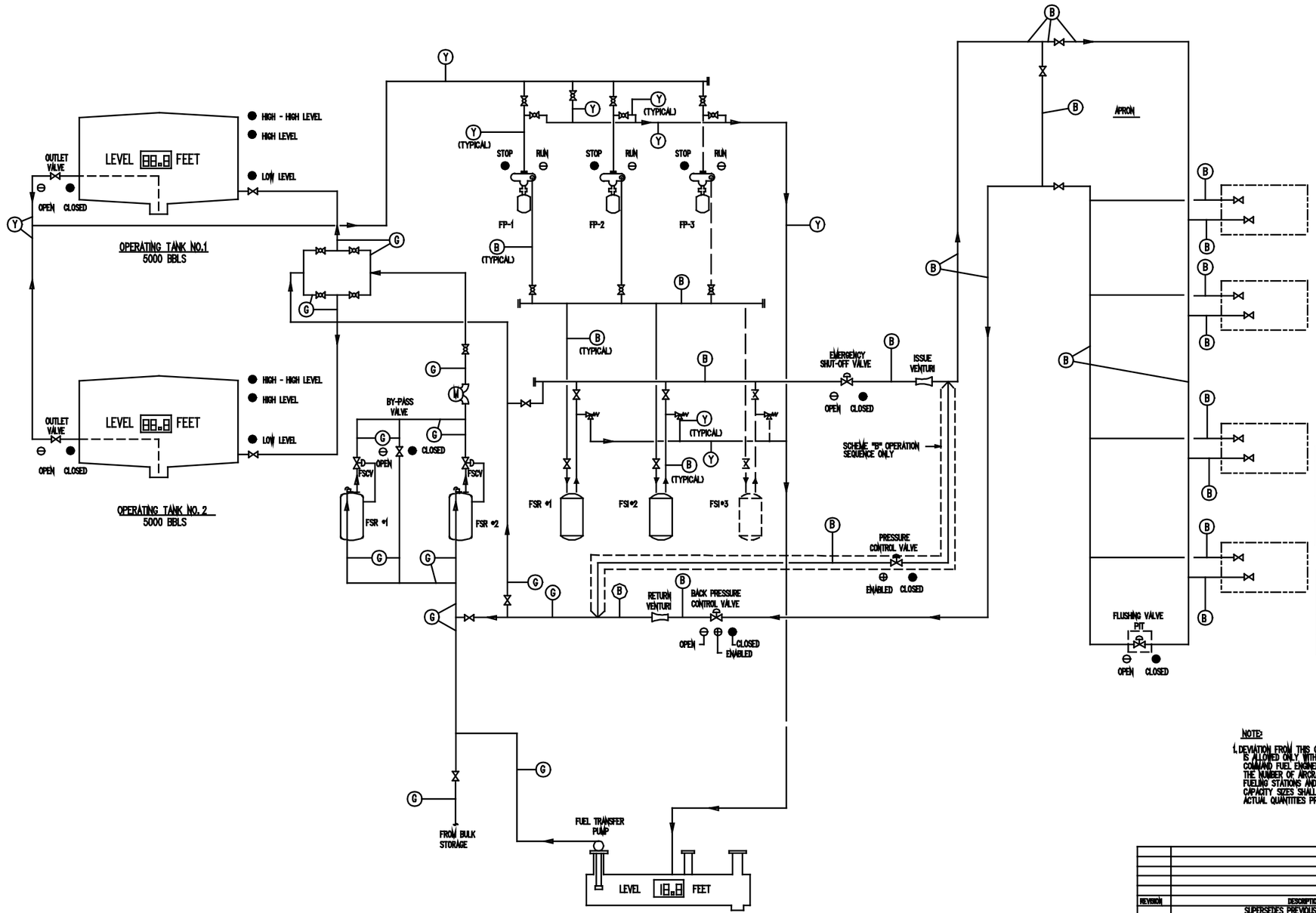

GRAPHIC DISPLAY 6 23/24

COLOR SCHEME LEGEND	
MARK	COLOR
B	BLUE
G	GREEN
Y	YELLOW

INDICATOR LIGHT LEGEND	
SYMBOL	DESCRIPTION
⊕	AMBER LIGHT
⊖	GREEN LIGHT
●	RED LIGHT

NOTE:

1. DEVIATION FROM THIS GRAPHIC DISPLAY IS ALLOWED ONLY WITH APPROVAL OF COMMAND FUEL ENGINEER, EXCEPT THAT THE NUMBER OF AIRCRAFT DIRECT FUELING STATIONS AND TANK CAPACITY SIZES SHALL MATCH ACTUAL QUANTITIES PROVIDED.

REVISION	DESCRIPTION	DATE	APPROVED

SUPERSEDES PREVIOUS EDITIONS OF THIS DRAWING

Robert and Company
Architects-Engineers-Planners
99 Peachtree Street, N.E. Atlanta, Georgia 30303

DSGN. A. BERGERON
DR. W. WEBB
SUPV. J. HENLEY
CHECKED BY: M. GARCIA
SUBMITTED BY: DATE: 12-2-80
EXC.
BR.HD.
FYE
APPROVED: DATE: 1/8/81
EFD FOR COMMANDER WAFAC

DEPARTMENT OF THE AIR FORCE
HEADQUARTERS MILITARY AIRLIFT COMMAND
SCOTT AIR FORCE BASE, ILLINOIS

ACCEPTED: DATE: 1-22-81
USAF FUEL FACILITIES ENGINEER

APPROVED FOR CHIEF OF STAFF, U.S. AIR FORCE

CHIEF, ENGINEERING DIVISION
DATE: 1-22-81

AIR FORCE STANDARDS
AIRCRAFT DIRECT FUELING SYSTEM
TYPE IV

GRAPHIC DISPLAY
UNVERIFIED DRAFT

SCALE: NO SCALE
SPEC. NO. 78-24-29-88-AF
SHEET 24
DRAWING NO. AN 78-24-29