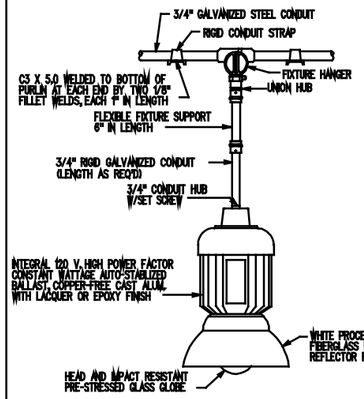

FIXTURES TYPE "A" & "A1"
MOUNTING DETAIL (1 | 21 | 21)
NO SCALE

NOTES:
1. LUMINAIRE SHALL COMPLY WITH U.L. 844 FOR CLASS I DIVISION I, GROUP D HAZARDOUS LOCATIONS.
2. ALL JOINTS SHALL BE THREADED TYPE.
3. FIXTURE SHALL HAVE INTERNAL PROVISIONS FOR GROUNDING.

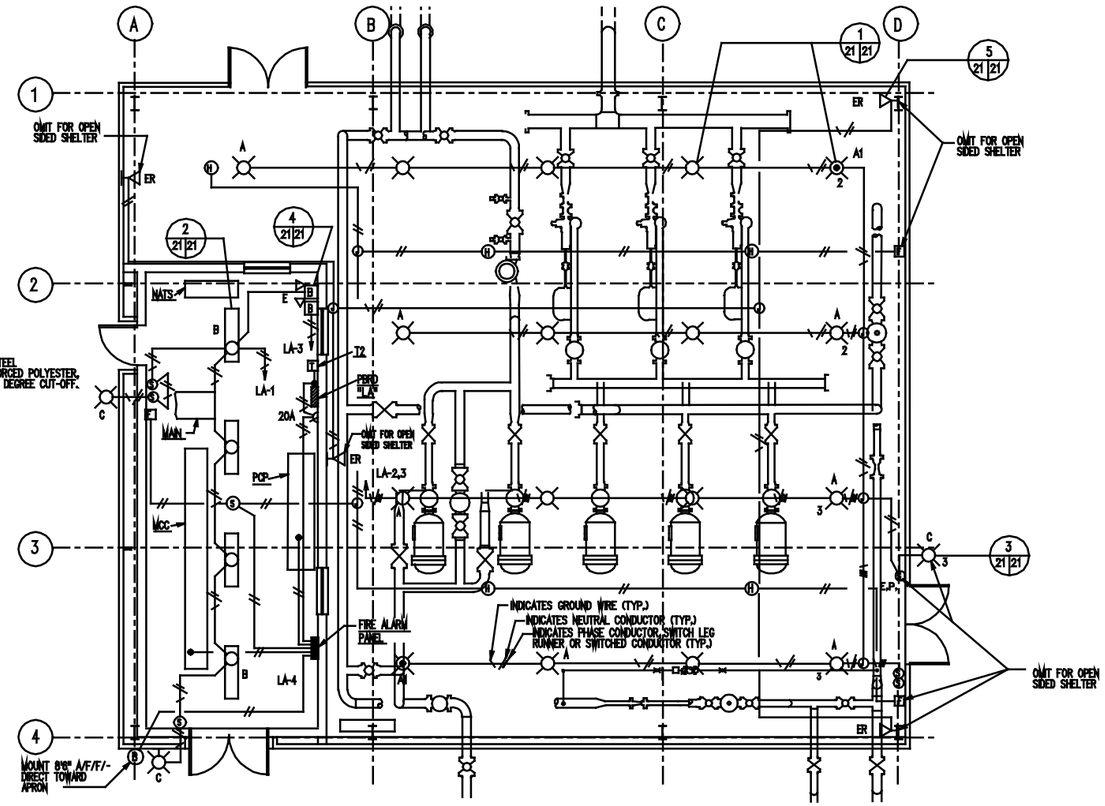

FIRE DETECTION SYSTEM & LIGHTING PLAN
SCALE: 1/4" = 1'-0"

LIGHTING FIXTURE SCHEDULE				
MARK	LAMPS	VOLTAGE	DESCRIPTION	MOUNTING
A	1-70W. CLEAR HIGH PRESSURE SODIUM	120	EXPLOSIONPROOF WITH REFLECTOR AND GLOBE	PENDENT 12'-0" A.F.F.
A1	1-70W. CLEAR H.P.S. & 1-150W QUARTZ AUXILIARY	120	EXPLOSIONPROOF WITH REFLECTOR AND GLOBE	PENDENT 12'-0" A.F.F.
B	4-F40CW	120	INDUSTRIAL TYPE WRAP-AROUND LUMINAIRE	SURFACE CEILING
C	1-35W. CLEAR H.P.S.	120	WEATHERPROOF H.I.D. LUMINAIRE	WALL 18'-6" A.F.F.
E	2-8W MIN. SEALED BEAM HALOGEN	120	EMERGENCY BATTERY & LIGHTING UNIT	WALL 8'-0" A.F.F.
ER	1-8W MIN. SEALED BEAM HALOGEN	12	EXPLOSIONPROOF EMERGENCY LIGHTING UNIT FOR REMOTE MOUNTING	WALL OR COLUMN 8'-0" A.F.F.

NOTES:
1. REFER TO NOTES 1,2,4,7,9,10,13, AND 14 ON SHEET 20 WHICH APPLY TO THIS SHEET.
2. REFER TO SHEET 27 FOR FIRE ALARM RISER DIAGRAM.

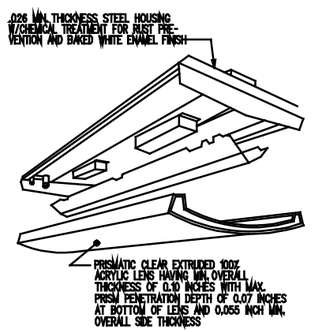

FIXTURE TYPE "B" (2 | 21 | 21)
NO SCALE

NOTES:
1. ENTIRE HOUSING SHALL BE PAINTED WHITE. HOUSING SHALL NOT PERMANENTLY DEFORM NOR SHALL IT DEFLECT MORE THAN 1" WHEN LIFTED BY ONE CORNER.
2. HOUSING ENDS SHALL BE SECURED BY RIVETS OR SCREWS. PROVIDE A KNOCKOUT IN EACH END AND TWO IN THE TOP OF HOUSING.
3. THE LENS SHALL FORM A 6-SIDED BASKET WITH WELDED END PLATES. LENS SHALL HAVE HINGE ALONG ENTIRE LENGTH OF FIXTURE AND SHALL BE LIFT AND SHIFT TYPE.
4. BALLAST SHALL BE HIGH POWER FACTOR ETL, CSA APPROVED RAPID START CLASS P ENERGY SAVING TYPE WITH SOUND RATING OF "A".
5. FIXTURE SHALL HAVE INTERNAL PROVISIONS FOR GROUNDING.

FIXTURE TYPE "C" (3 | 21 | 21)
NO SCALE

NOTES:
1. PROVIDE ANODIZED ALUMINUM REFLECTOR AND ADJUSTABLE MOGUL BASE GLAZED PORCELAIN LAMPHOLDER, PREWIRED.
2. PROVIDE CAST KNOCKOUTS FOR RECESSED BOX MOUNTING.
3. FIXTURE SHALL HAVE INTERNAL PROVISIONS FOR GROUNDING.
4. FIXTURE SHALL CONFORM TO UL 57 FOR WET LOCATIONS.
5. PROVIDE 120 VOLT HIGH POWER TYPE BALLAST FOR OPERATION AT AMBIENT TEMPERATURES FROM MINUS 20 DEGREES TO 105 DEGREES F.

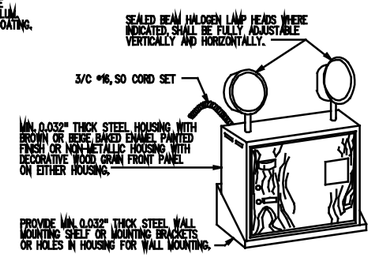

FIXTURE TYPE "E" (4 | 21 | 21)
NO SCALE

NOTES:
1. PROVIDE SEALED BATTERY SPECIFICALLY DESIGNED FOR EMERGENCY LIGHTING, SOLID STATE FULLY AUTOMATIC THREE-RATE CHARGER FOR NICKEL CADMIUM BATTERY AND TWO-RATE CHARGER FOR LEAD CALCIUM OR LEAD ACID SEALED BATTERIES.
2. PROVICE TEST SWITCH, "AC ON", PILOT LIGHT, VOLTMETER, AND AUTOMATIC OVERLOAD PROTECTION.

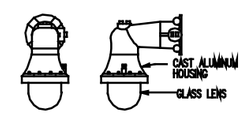

FIXTURE TYPE "ER" (5 | 21 | 21)
NO SCALE

NOTES:
1. FIXTURE SHALL COMPLY WITH UL 844, UL 1203, AND UL 924

GRAPHIC SCALE
1/4" = 1'-0" 2' 1' 0 2' 4' 6' 8' 10'

REVISION	DESCRIPTION	DATE	APPROVED

SUPERSEDES PREVIOUS EDITIONS OF THIS DRAWING

Robert and Company
Architects-Engineers-Planners
60 Hyde Street, Hyannis, Massachusetts

DEPARTMENT OF THE AIR FORCE
HEADQUARTERS 9000 ATRAN AIR FORCE
WASHINGTON, D.C. 20330

DESIGN LEAD ENGR. CHK.
DR. W. MOONEY
SUPV. L. BEASLEY CHK. PROJ. J. CLARKE
SUBMITTED BY: DATE: 12-1-80
EIC.
BRLND.
FPE.
APPROVED: DATE: 1/8/81
BFD FOR COMMANDER NAVFAC

ACCEPTED: DATE: 1-22-81
USAF FUEL FACILITIES ENGINEER

APPROVED FOR CHIEF OF STAFF, U.S. AIR FORCE

CHIEF, ENGINEERING DIVISION
DATE: 1-22-81

AIR FORCE STANDARDS
AIRCRAFT DIRECT FUELING SYSTEM
TYPE IV

FIRE DETECTION SYSTEM & LIGHTING PLAN - DETAILS
UNVERIFIED DRAFT

SCALE: AS NOTED
SPEC. NO. 78-24-28-RB-AF
SHEET 21
DRAWING NO. AN 78-24-29