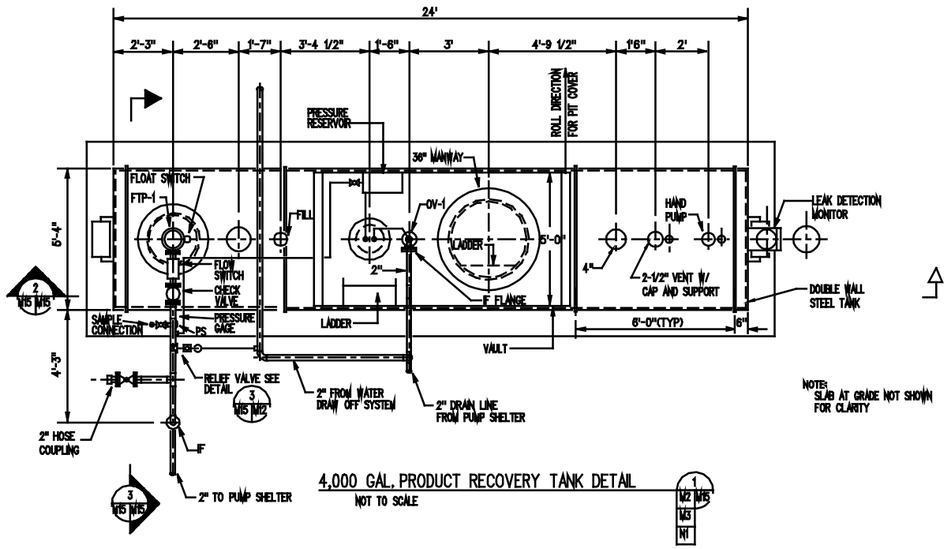

NOTE: SLAB AT GRADE NOT SHOWN FOR CLARITY

4,000 GAL. PRODUCT RECOVERY TANK DETAIL
NOT TO SCALE

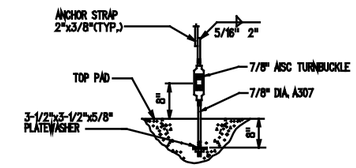

DETAIL

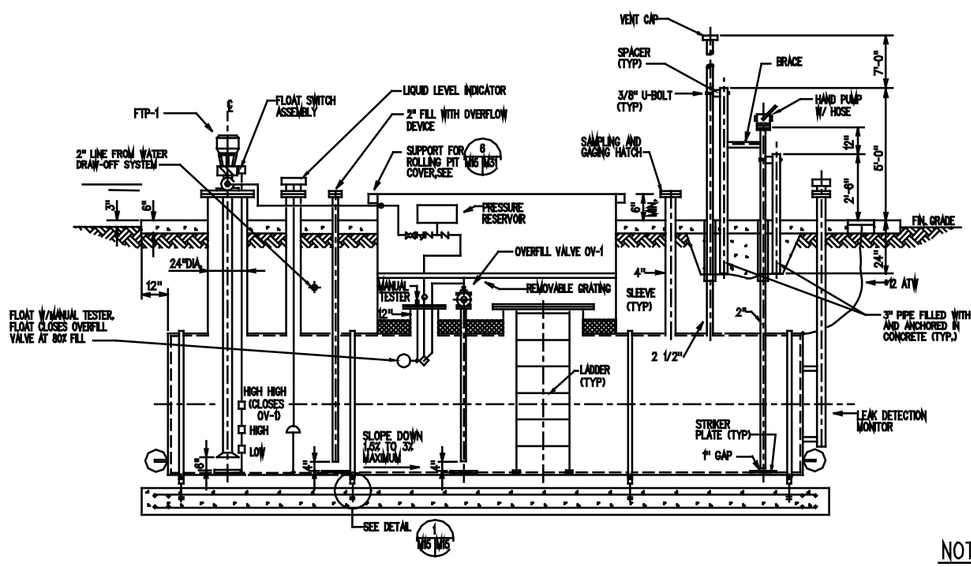

SECTION
NOT TO SCALE

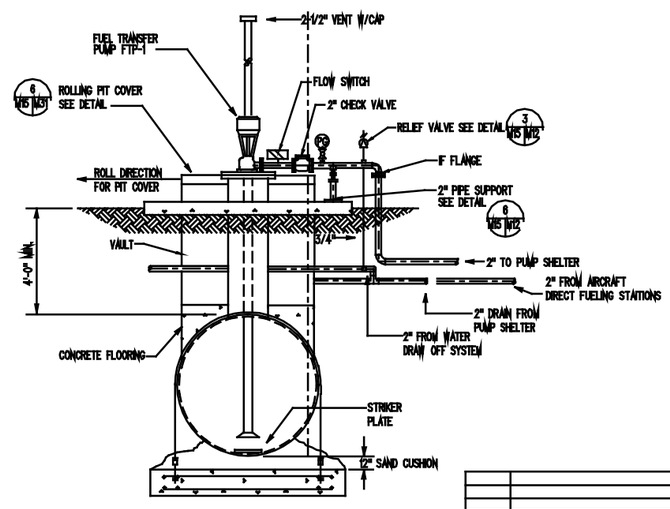

SECTION
NOT TO SCALE

NOTES:

1) NOTE-HOLD DOWN PAD SIZE AND REINFORCING SHALL BE BASED ON DEPTH OF TANK AND WATER TABLE. CALCULATIONS SHOULD BE SUBMITTED FOR APPROVAL.

2) TANK MUST MEET ALL FEDERAL AND LOCAL UNDERGROUND STEEL TANK ENVIRONMENTAL REGULATIONS.

REVISION	DESCRIPTION	DATE	APPROVED

SUPERSEDES PREVIOUS EDITIONS OF THIS DRAWING

Robert and Company
Architects/Engineers
60 Inverness Drive, E-O, Denver, Colorado 80112

DSGN. BEALLY CHK. MAULITZ
DR. MORE
SUPV. CALENDO
CHIEF BEALLY MAULITZ
SUBMITTED BY DATE 12-7-90
EIC.
BR.HD.
FPE.
APPROVED DATE 1/8/91
EFD FOR COMMANDER NAVFAC

DEPARTMENT OF THE AIR FORCE
HEADQUARTERS TACTICAL AIR FORCE
TYNDALL AIR FORCE BASE, FLORIDA

ACCEPTED DATE 1-22-91
USAF FUEL FACILITIES ENGINEER
APPROVED FOR CHIEF OF STAFF, U.S. AIR FORCE
CHIEF, ENGINEERING DIVISION
DATE 1-22-91

AIR FORCE STANDARDS
AIRCRAFT DIRECT FUELING SYSTEM
TYPE IV

PRODUCT RECOVERY TANK
UNVERIFIED DRAFT

SCALE: AS NOTED
SPEC. NO. 78-24-28-88-AF
SHEET 15
DRAWING NO. AF 78-24-29