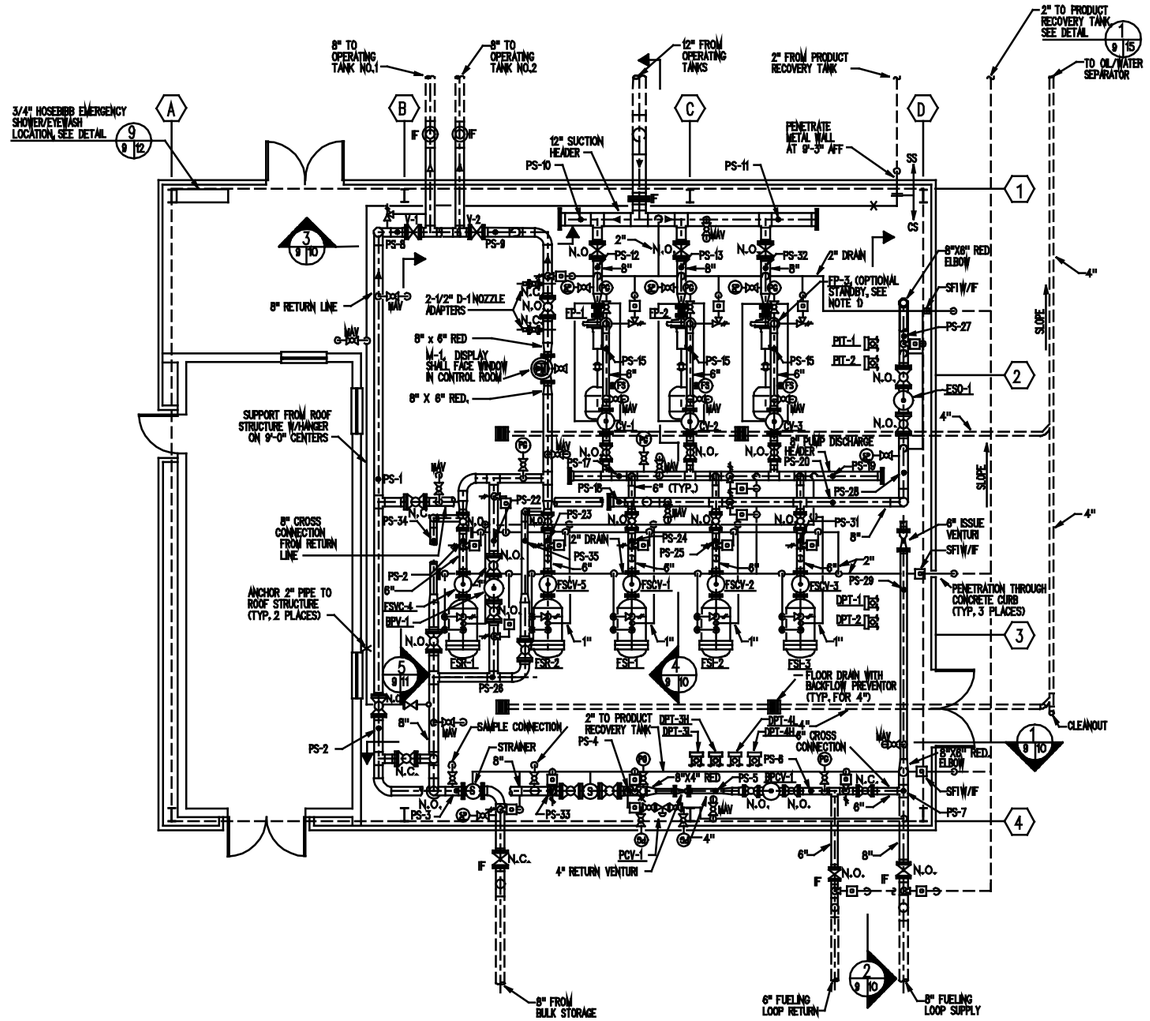

PUMP HOUSE PLAN

SCALE: 1/4" = 1'-0"

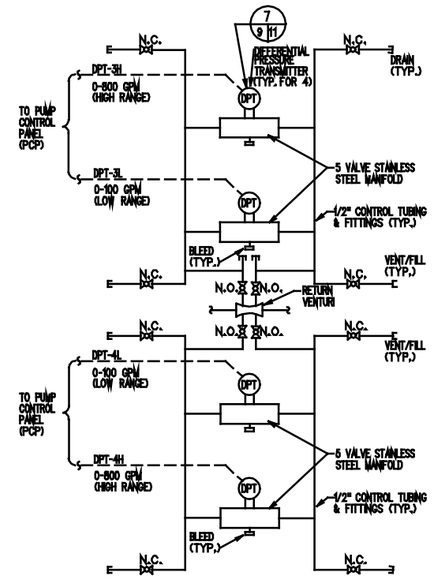

DETAIL 3/9 | 9

SCALE: NONE

RETURN VENTURI TUBE CONTROL DIAGRAM

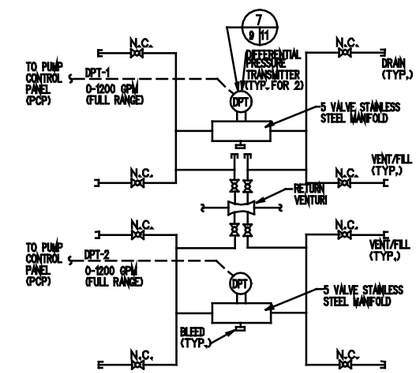

DETAIL 4/9 | 9

SCALE: NONE

ISSUE VENTURI TUBE CONTROL DIAGRAM

PUMP SCHEDULE

DESIGNATION	FLUID	TYPE	GPM	HEAD	MOTOR HP	MOTOR RPM	ELECTRICAL
FUELING PUMPS FP-1 THRU FP-3	*	CENTRIFUGAL END SUCTION	600	*	* 100	3600	460V-3Ø-60HZ
FUEL TRANSFER PUMP FTP-1	*	VERTICAL TURBINE	50	*	* 10	1800	460V-3Ø-60HZ

* TO BE PROVIDED BY A/E BASED ON SITE REQUIREMENTS. STANDARD DESIGN BASED ON VALUE SHOWN. ALL SELECTED HP'S SHALL BE BASED ON HYDRAULIC ANALYSIS. SYSTEM RELIEF VALVES SHALL BE ADJUSTED ACCORDINGLY.

NOTES:

1. THE OPTIONAL STANDBY THIRD PUMP AND FILTER SEPARATOR WILL BE PROVIDED WHEN DIRECTED BY THE COMMAND FUEL FACILITIES ENGINEER.
2. DOTS ⊗ ON PIPES INDICATE PIPE SUPPORT LOCATIONS, SEE SHEET 28.
3. ALL PIPING SHALL BE STAINLESS STEEL WITH THE FOLLOWING EXCEPTIONS:
   a. 8" TRANSFER PIPE FROM BULK STORAGE TANKS TO THE INSULATING FLANGE AT THE PUMP HOUSE (INTERIOR EPOXY COATED CARBON STEEL OR STAINLESS STEEL.)
   b. 2" PIPING FROM PRODUCT RECOVERY TANK TO THE INSULATING FLANGES AT THE PUMP HOUSE AND 2" PIPING FROM AIRCRAFT DIRECT FUELING STATION TO THE INSULATING FLANGE AT THE PRODUCT RECOVERY TANK. (INTERIOR EPOXY COATED CARBON STEEL OR STAINLESS STEEL.)
   c. 2" PIPING FROM WATER DRAIN-OFF TANK TO PRODUCT RECOVERY TANK. (FIBERGLASS REINFORCED PLASTIC (FRP), INTERIOR EPOXY COATED CARBON STEEL OR STAINLESS STEEL.)

4' 2' 0 4' 8'

1/4" = 1'-0"

REVISION	DESCRIPTION	DATE	APPROVED

SUPERSEDES PREVIOUS EDITIONS OF THIS DRAWING

Robert and Company
Architects-Engineers-Planners
99 Peachtree Street, N.E. Atlanta, Georgia 30303

DEPARTMENT OF THE AIR FORCE
HEADQUARTERS AIR FORCE CENTER FOR ENGINEERING AND SERVICES
BROOKS AIR FORCE BASE, TEXAS

AIR FORCE STANDARDS
AIRCRAFT DIRECT FUELING SYSTEM
TYPE IV

UNVERIFIED DRAFT

PUMP HOUSE PIPING PLAN

ISSUED: WEBLEY CHIC. BLUTZ
CK: GRM
SUPV: WEBLEY CH ENGR. BLUTZ
SUBMITTED BY: DATE: 12-1-80

EIC:
BR.HD.:
FPE:

APPROVED: DATE: 1/8/81
EFD FOR COMMANDER NAVFAC

ACCEPTED: DATE: 1-22-81
USAF FUEL FACILITIES ENGINEER

APPROVED FOR CHIEF OF STAFF, U.S. AIR FORCE

CHIEF, ENGINEERING DIVISION
DATE: 1-22-81

SCALE: AS NOTED

SPEC. NO. 78-34-29-88-AF

SHEET 9

DRAWING NO. AF 78-34-29