TYPICAL LOCATION OF AIRCRAFT FUELING POINTS

LEFT SIDE	RIGHT SIDE
AV - 8	F - 14
F - 16	F - 13
A - 7	F - 6
* F - 15	F - 4

* = SHOWN

NOTES

1. RELATIVE SPACING AIRCRAFT TO AIRCRAFT DIRECT FUELING STATION SHALL BE DESIGNATED BY THE COMMAND FUEL FACILITIES ENGINEER.
2. ALL UNDERGROUND PIPING SHALL BE SHOWN BOTH IN PLAN AND IN PROFILE. SEE SHEET 4 FOR TYPICAL PROFILE.
3. PROVIDE FIRE PROTECTION AROUND RAMP AS REQUIRED BY AIR FORCE, STATE, FEDERAL AND LOCAL REGULATIONS.
4. CLEARANCE FROM AIRCRAFT DIRECT FUELING STATION TO INHABITED BUILDINGS TO BE MINIMUM OF 200 FEET. CLEARANCES OTHER THAN THOSE SHOWN SHALL CONFORM TO DM-21, AFR 127-100, AFR 88-14 AND DM-22.
5. ABOVEGROUND REFUELING HARDWARE SHOULD BE LOCATED SO THAT IT DOES NOT VIOLATE THE PRIMARY SURFACE OR THE 7:1 TRANSITION SURFACE OF A RUNWAY, THE 100 FEET CLEARANCE FOR A PARKING APRON OR THE 150 FEET CLEARANCE LANE. THE REFUELING AREA SHOULD BE LOCATED SO THAT NO PART OF AN AIRCRAFT RECEIVING FUEL VIOLATES ANY OF THE ABOVE CLEARANCE AREAS.

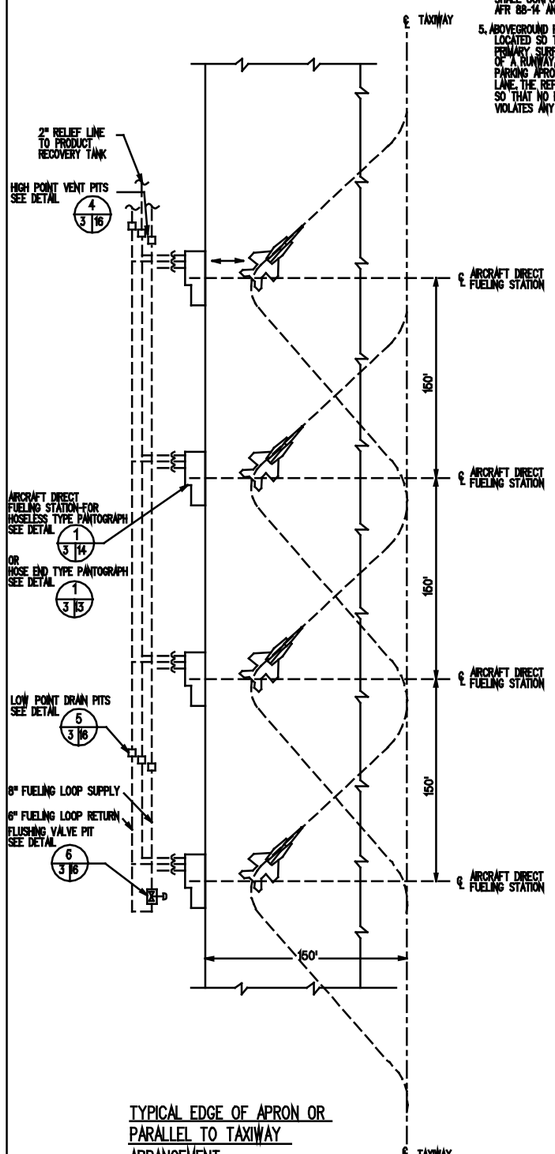

TYPICAL EDGE OF APRON OR PARALLEL TO TAXIWAY ARRANGEMENT

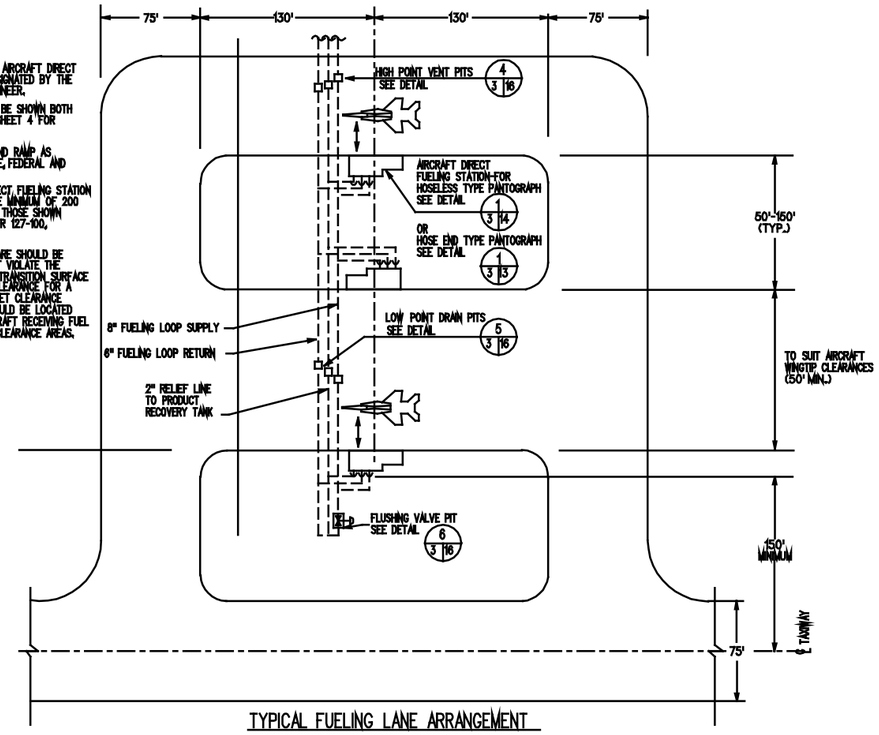

TYPICAL FUELING LANE ARRANGEMENT

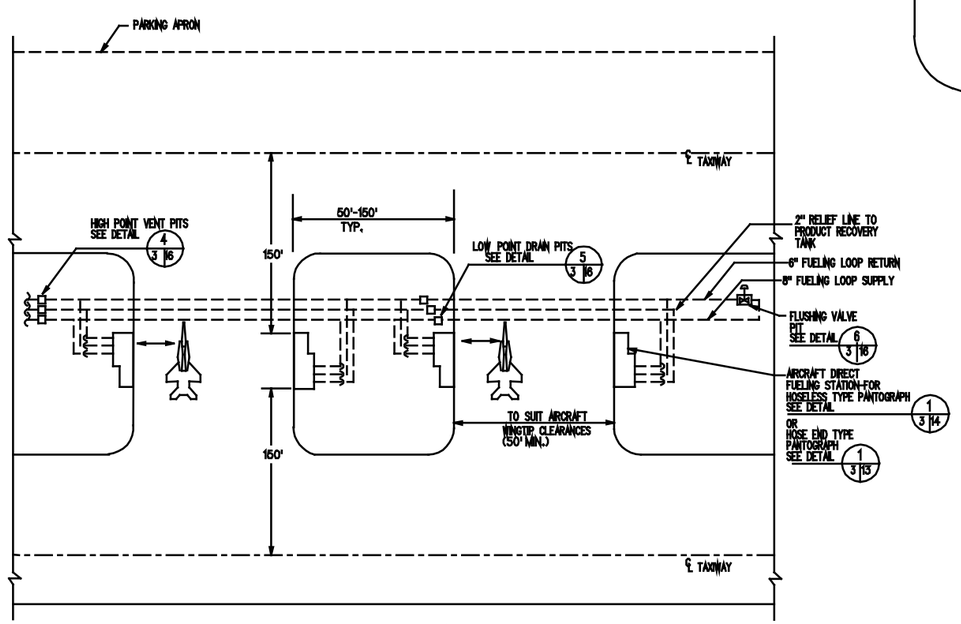

TYPICAL FUELING LANES BETWEEN TAXIWAY AND PARKING APRON

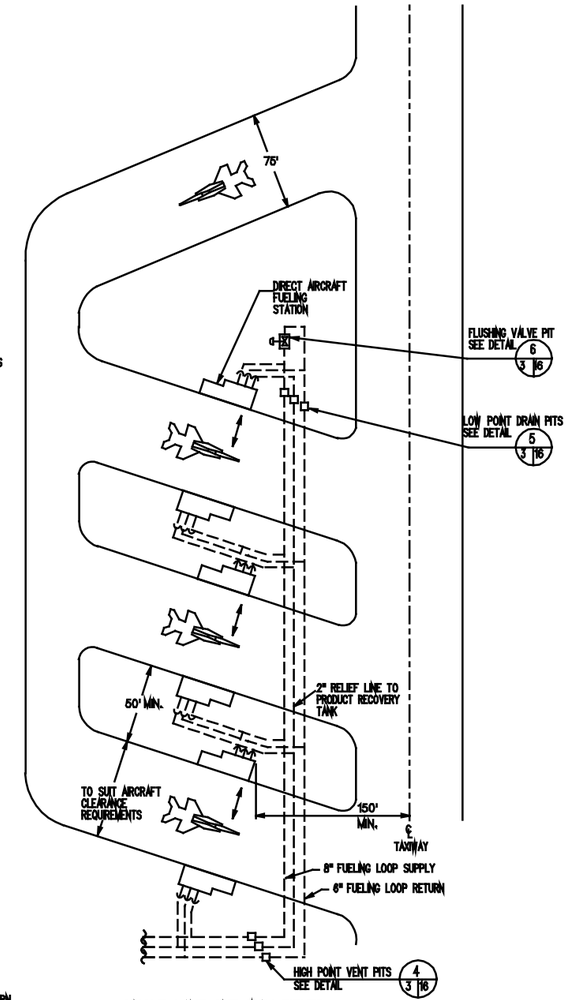

SINGLE LANE-ONE WAY-EITHER DIRECTION, FUEL EITHER SIDE ARRANGEMENT

GRAPHIC SCALE

40' 20' 0 40' 80'

1" = 40'-0"

REVISION	DESCRIPTION	DATE	APPROVED

SUPERSEDES PREVIOUS EDITIONS OF THIS DRAWING

Robert and Company
Architects-Engineers-Planners
111 Peachtree Street, N.E., Atlanta, Georgia 30303

DESIGN BY: W. HEASLEY CHK: W. HOLTZ
DR: SUP: W. HEASLEY CHI. ENGR: W. HOLTZ
SUBMITTED BY: DATE: 12-1-80
EIC:
BRJHD:
FPE:
APPROVED: DATE: 1/28/81
EFD FOR COMMANDER NAVFAC

DEPARTMENT OF THE AIR FORCE
HEADQUARTERS USAF/LEEE, AIR FORCE ENGINEERING AND SERVICES CENTER
TYNDALL AIR FORCE BASE, FLORIDA 32403

ACCEPTED: DATE: 1-22-81
USAF FUEL FACILITIES ENGINEER

APPROVED FOR CHIEF OF STAFF, U.S. AIR FORCE

CHIEF, ENGINEERING DIVISION
DATE: 1-22-81

AIR FORCE STANDARDS
AIRCRAFT DIRECT FUELING SYSTEM
TYPE IV

UNVERIFIED DRAFT
TYPICAL APRON/TAXI LANE ARRANGEMENT

SCALE: AS NOTED
SPEC. NO. 79-24-23-00-AF
SHEET 3
DRAWING NO. AF 79-24-20