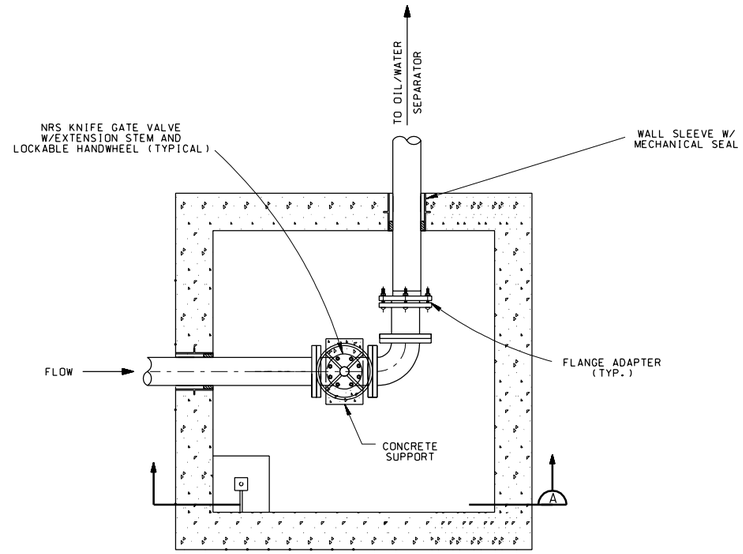

PLAN
TYPICAL VALVE PIT
NO SCALE

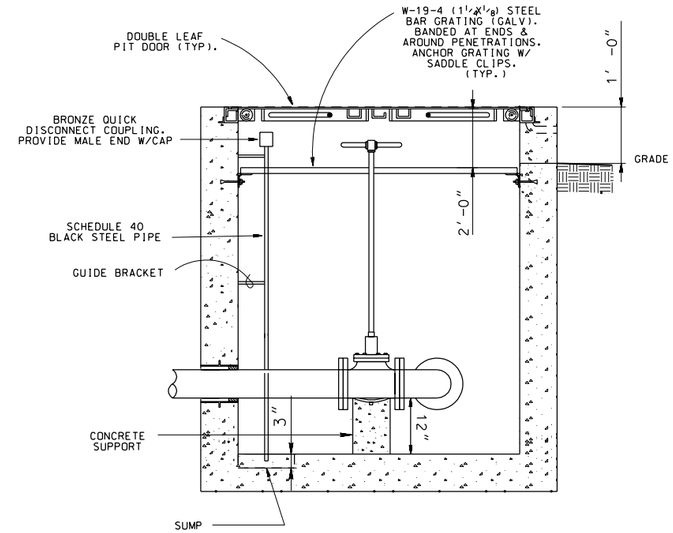

SECTION A

VALVE PIT
NO SCALE

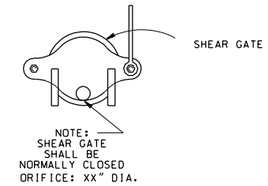

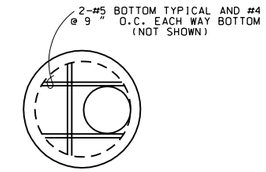

TOP SLAB REINFORCEMENT DETAIL

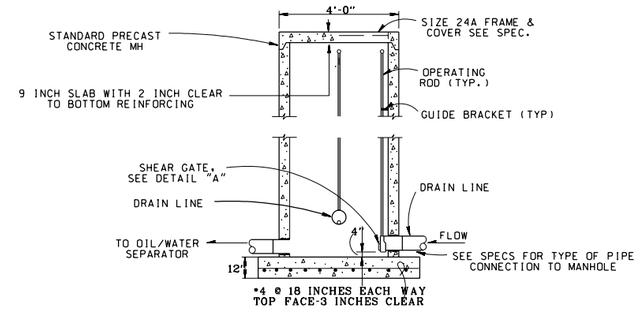

NOTES

1. ECCENTRIC CONE MAY BE PROVIDED IN LIEU OF FLAT TOP.
2. MANHOLE OPENING SHALL BE ABOVE SHEAR GATE OPERATING ROD.

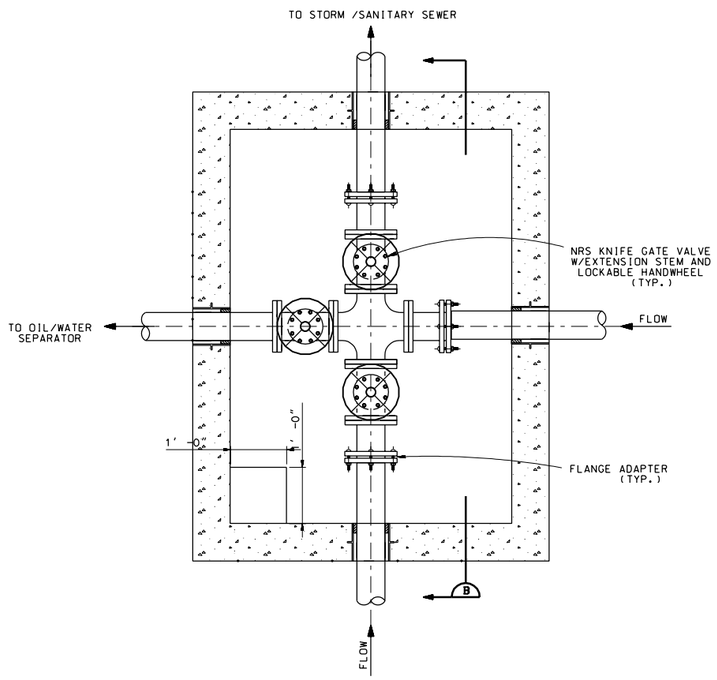

PLAN
TYPICAL DRAIN
BY-PASS VALVE PIT
NO SCALE

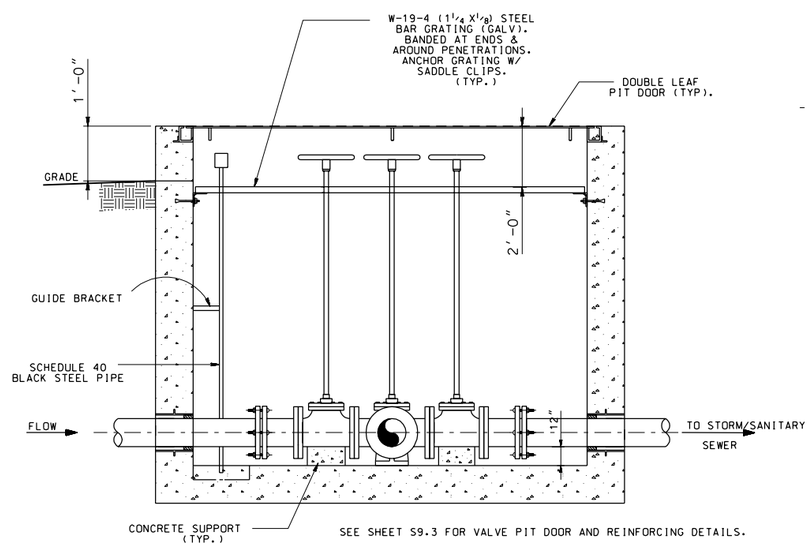

SEE SHEET S9.3 FOR VALVE PIT DOOR AND REINFORCING DETAILS.

SECTION B

DRAIN BY-PASS
VALVE PIT
NO SCALE

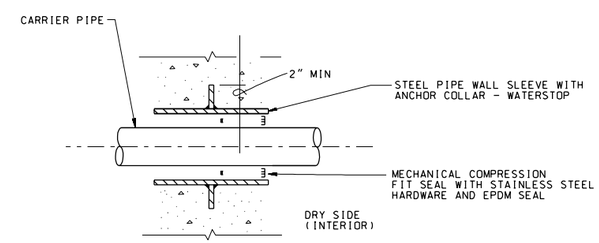

NOTE:
PROVIDE WALL SLEEVE OF SUFFICIENT INSIDE DIAMETER TO FACILITATE INSTALLATION OF CARRIER PIPE AND TO MEET REQUIREMENTS OF MECHANICAL COMPRESSION FIT SEAL MANUFACTURER

$$ - THINK VALUE ENGINEERING - $$

REVISIONS

SYMBOL	DESCRIPTIONS	DATE	APPROVED

ROBERT AND COMPANY
96 POPLAR ST., N.W.
ATLANTA, GA 30335

US ARMY ENGINEER DISTRICT
CORPS OF ENGINEERS
OMAHA, NE

AIR FORCE C.E. SUPPORT AGENCY
139 BARNES DRIVE, SUITE #1
TYNDALL AFB, FL 32403-5319

DESIGNED BY: RAK
DRAWN BY: RAK
CHECKED BY: RAK
REVIEWED BY: GMS
SUBMITTED BY:
CHIEF, ENVIR SECTION

AIR FORCE STANDARDS
PRESSURIZED HYDRANT FUELING SYSTEM
TYPE III

DRAIN VALVE PIT DETAILS

PLOT SCALE RATIO: 1:1
DESIGN FILE: SD18U402.DGN
DATE: REV. #1 NOV. 1998
SPEC. NO.: 78-24-28-88
DRAWING CODE: AW 78-24-28
SHEET REFERENCE NUMBER: U4.2

COMPUTER AIDED DESIGN & DRAFTING

SD18U402.DGN 11/18/2002 10:05:46 AM