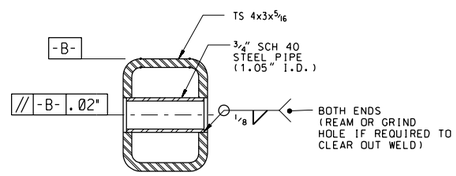

AXLE SLEEVE DETAIL

SCALE: 6 INCHES = 1 FOOT

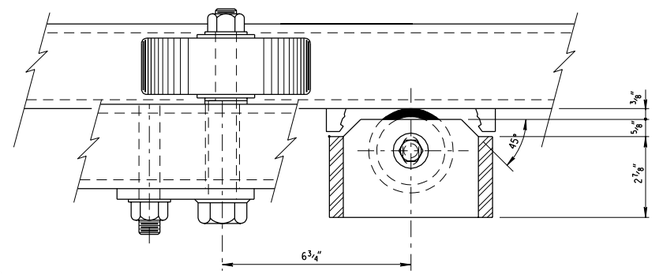

PARTIAL PLAN

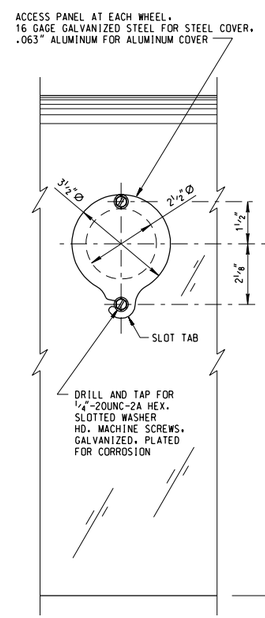

EXTERIOR SIDE VIEW

SCALE: 6 INCHES = 1 FOOT

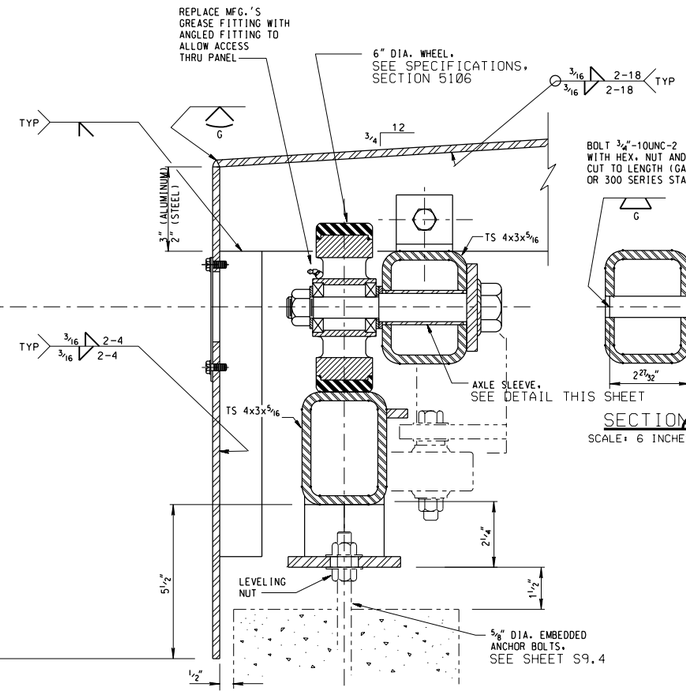

AT PIER AND CONCRETE VAULT WALL

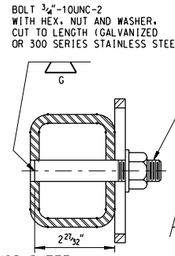

SECTION 2

SCALE: 6 INCHES = 1 FOOT

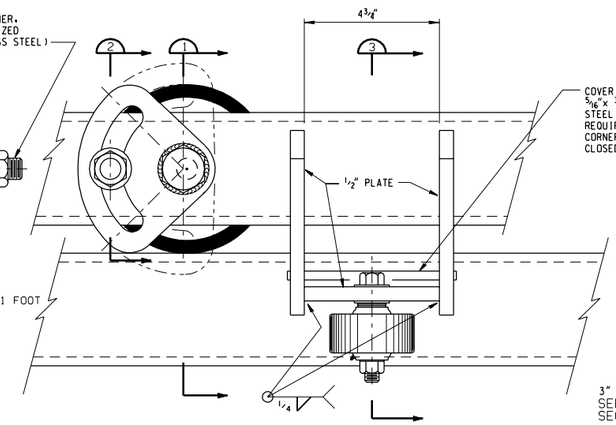

ELEVATION

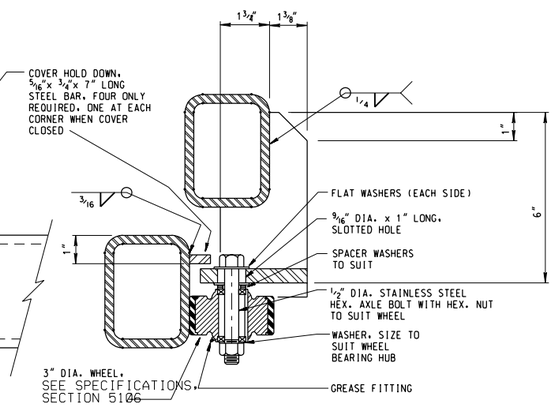

SECTION 3

ROLLING COVER WHEEL DETAILS

SCALE: 6 INCHES = 1 FOOT

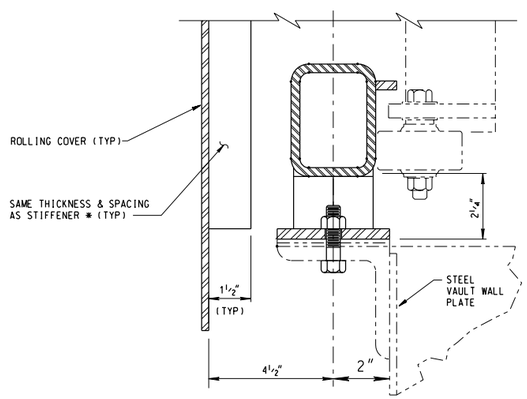

AT METAL VAULT

SECTION 1 S9.5/S9.6

SCALE: 6 INCHES = 1 FOOT

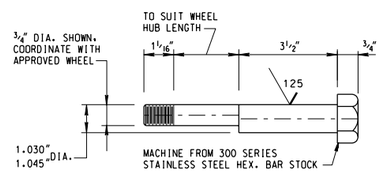

ECCENTRIC BOLT

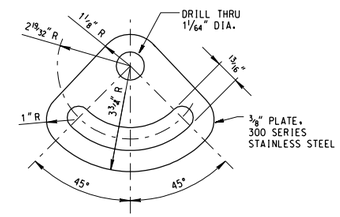

ADJUSTER

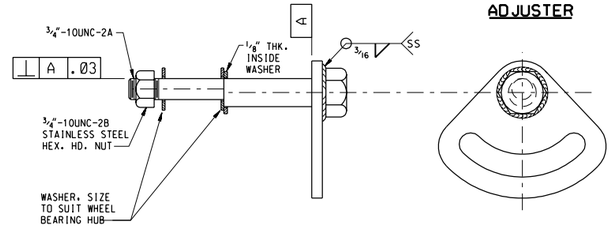

ECCENTRIC AXLE ASSEMBLY

SCALE: 6 INCHES = 1 FOOT

SCALE: 6 INCHES = 1 FOOT

0 1' 2' 3' 6'

COMPUTER AIDED DESIGN & DRAFTING

$$ - THINK VALUE ENGINEERING - $$

REVISIONS

SYMBOL	DESCRIPTIONS	DATE	APPROVED

U.S. ARMY ENGINEER DISTRICT
CORPS OF ENGINEERS
OMAHA, NEBRASKA

AIR FORCE C.E. SUPPORT AGENCY
139 BARNES DRIVE, SUITE *1
TYNDALL AFB, FL 32403-5319

DESIGNED BY: K.E.M. / J.J.L.
DRAWN BY: K.E.M.
CHECKED BY: B.N.H. / S.G.E.
REVIEWED BY: B.N.H. / S.G.E.
SUBMITTED BY:
CHIEF, STRUCTURAL SECTION

AIR FORCE STANDARDS
PRESSURIZED HYDRANT FUELING SYSTEM
TYPE III

VAULT ROLLING COVER DETAIL
SHEET 3 OF 3

PLOT SCALE RATIO: .166 : 1
DESIGN FILE: SD18S906.DGN
DATE: REV. *1 NOV. 1998
SHEET REFERENCE NUMBER: S9.6
SPEC. NO.: 78-24-28-88
DRAWING CODE: AW 78-24-28

SD18S906.DGN 11/18/2002 10:05:29 AM