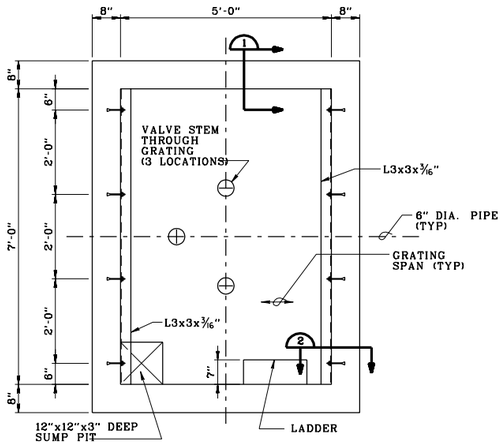

BY-PASS VALVE PIT (SEE U4.2)

SCALE: 3/4 INCH = 1 FOOT

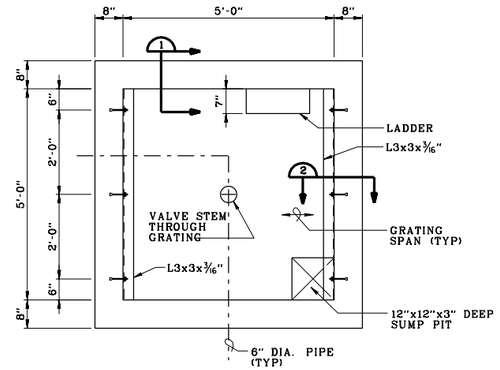

VALVE PIT (SEE U4.2)

SCALE: 3/4 INCH = 1 FOOT

NOTES TO THE DESIGNER:

1. PLAN AND DETAILS SHOWN ARE TYPICAL FOR THE APPLICATIONS SHOWN ON SHEET U4.2. REINFORCED CONCRETE FOR THE PITS SHALL BE REDESIGNED IF THE REQUIRED PLAN DIMENSIONS EXCEED THOSE SHOWN OR IF DEPTH OF PIT EXCEEDS 7'-0" BELOW GRADE.
2. WHEN REQUIRED, REINFORCED CONCRETE FOR THE PITS SHALL BE DESIGNED FOR SITE SPECIFIC LOADINGS INCLUDING THE EFFECTS OF LATERAL EARTH PRESSURE, HYDROSTATIC PRESURE AND THE EFFECTS OF SURCHARGE. DESIGN OF THE PITS SHALL INCORPORATE THE USE OF WATERSTOPS AT CONSTRUCTION JOINTS. ON THE FORM TIES, AND INCREASED CONCRETE COVER ON REBAR TO PREVENT CORROSION. WHERE THE SOILS INVESTIGATION INDICATES THE WATER TABLE MAY RISE ABOVE THE FLOOR OF THE VAULT OR WHERE PREVIOUS EXPERIENCE INDICATES WATER LEAKAGE HAS BEEN A PROBLEM IN BELOW GRADE STRUCTURES, ADDITIONAL MEASURES MAY BE REQUIRED TO CONTROL MOISTURE INFILTRATION INTO THE PIT.

VALVE PIT NOTES:

1. SEE SHEET U4.2 FOR PIPING PLAN, GRADE AND PIPE CENTERLINE ELEVATIONS AND ADDITIONAL DETAILS.
2. REMOVABLE BAR GRATING NOT SHOWN ON PLAN FOR CLARITY.
3. GRATING, SUPPORTS AND LADDER SHALL BE HOT-DIP GALVANIZED IN ACCORDANCE WITH ASTM A123.
4. CAST-IN-PLACE REINFORCED CONCRETE
   A. CONCRETE: SPECIFIED COMPRESSIVE STRENGTH F'c = 4000 PSI @ 28 DAYS FOR ALL WORK.
   B. REINFORCING BARS: SPECIFIED YIELD STRENGTH Fy = 60 KSI (GRADE 60).
5. EXPANSION BOLTS SHALL CONFORM TO FED. SPEC. FF-S-325, GROUP II, TYPE 4, CLASS 1, SIZE AS NOTED ON DRAWINGS.
6. PIT DOORS
   A. SEE SHEET U4.2 FOR SIZE AND TYPE OF PIT DOOR.
   B. SINGLE AND DOUBLE LEAF VALVE PIT DOORS SHALL BE THE PRODUCT OF A COMPANY REGULARLY ENGAGED IN THE MANUFACTURE OF SUCH DOORS.
   C. PIT DOORS SHALL BE DESIGNED TO WITHSTAND A LIVE LOAD OF 150 POUNDS PER SQUARE FOOT.
   D. DOORS AND FRAMES SHALL BE OF EITHER ALUMINUM OR STEEL CONSTRUCTION AT THE OPTION OF THE CONTRACTOR UNLESS SPECIFICALLY CALLED OUT AS ALUMINUM. STEEL DOORS AND FRAMES SHALL BE HOT-DIP GALVANIZED IN ACCORDANCE WITH ASTM A 123.
   E. DOOR SHALL OPEN TO 90 DEGREES AND SHALL BE EQUIPPED WITH HEAVY BRASS HINGES, STAINLESS STEEL PINS, COMPENSATING SPRINGS OR TORSION BARS, HOLD OPEN ARM AND SNAP LOCK WITH RELEASE HANDLE ON THE UNDERSIDE AND REMOVABLE KEY HANDLE FOR RELEASING LOCK FROM ABOVE. HARDWARE SHALL BE ZINC PLATED AND CHROMATE SEALED.
   F. DOORS SHALL DRAIN TO A CHANNEL FRAME TO PREVENT RAINWATER FROM ENTERING THE PIT. A 1 1/2" DRAINAGE COUPLING SHALL BE PROVIDED. DRAINS SHALL BE PROVIDED TO ALLOW DRAINAGE FROM THE CHANNEL FRAME ONTO THE SURROUNDING GRADE OR PAVEMENT.

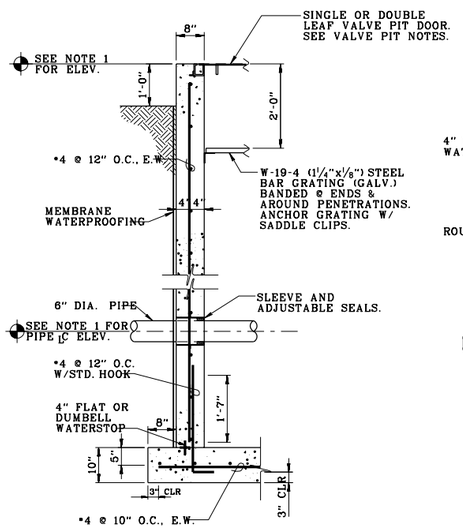

TYPICAL WALL REINFORCING

SECTION 1

SCALE: 3/4 INCH = 1 FOOT

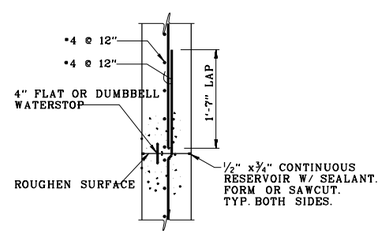

HORIZONTAL CONSTRUCTION JOINTS SHALL BE SHOWN ON SHOP DRAWINGS AND SUBMITTED FOR APPROVAL.

HORIZONTAL CONSTRUCTION JOINT (OPTIONAL)

NO SCALE

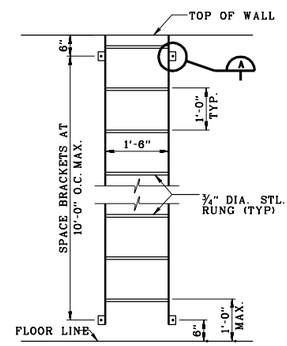

LADDER ELEVATION

SCALE: 3/4 INCH = 1 FOOT

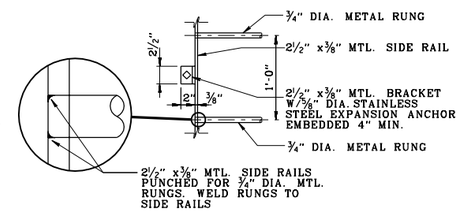

ELEVATION OF BRACKET

NO SCALE

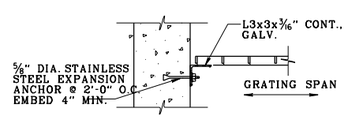

SECTION 2

SCALE: 1 1/2 INCH = 1 FOOT

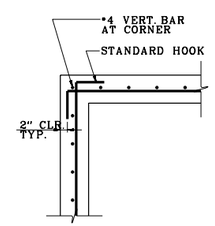

TYPICAL WALL CORNER DETAIL

SCALE: 3/4 INCH = 1 FOOT

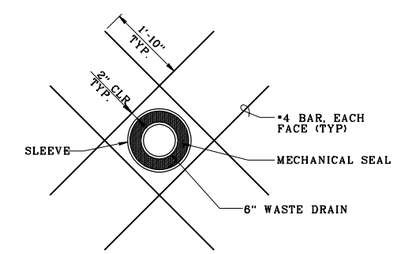

WHERE BASE SLAB DOES NOT ALLOW FULL EXTENSION OF EXTRA #4 BARS, EXTEND AS FAR AS POSSIBLE AND BEND HORIZONTAL. WHERE INTERSECTING WALL DOES NOT ALLOW FULL EXTENSION, PROVIDE 90 DEGREE BEND INTO INTERSECTING WALL.

TYPICAL WALL PENETRATION DETAIL

NO SCALE

$$ - THINK VALUE ENGINEERING - $$

REVISIONS

SYMBOL	DESCRIPTIONS	DATE	APPROVED

ROBERT AND COMPANY
96 POPLAR ST., N.W.
ATLANTA, GA 30335

US ARMY ENGINEER DISTRICT
CORPS OF ENGINEERS
OMAHA, NE

AIR FORCE C.E. SUPPORT AGENCY
139 BARNES DRIVE, SUITE #1
TYNDALL AFB, FL 32403-5319

DESIGNED BY: G.M.J.
DRAWN BY: G.M.J.
CHECKED BY: B.N.H.
REVIEWED BY: B.N.H.
SUBMITTED BY:
CHIEF, STRUC SECTION

AIR FORCE STANDARDS
PRESSURIZED HYDRANT FUELING SYSTEM
TYPE III

WASTE DRAIN VALVE PIT PLANS AND DETAILS

PLOT SCALE RATIO: 4:3
DESIGN FILE: SD18S903.DGN
DATE: REV. #1 NOV. 1998
SPEC. NO.: 78-24-28-88
DRAWING CODE: AW 78-24-28
SHEET REFERENCE NUMBER: S9.3

COMPUTER AIDED DESIGN & DRAFTING

SD18S903.DGN 11/18/2002 10:04:33 AM