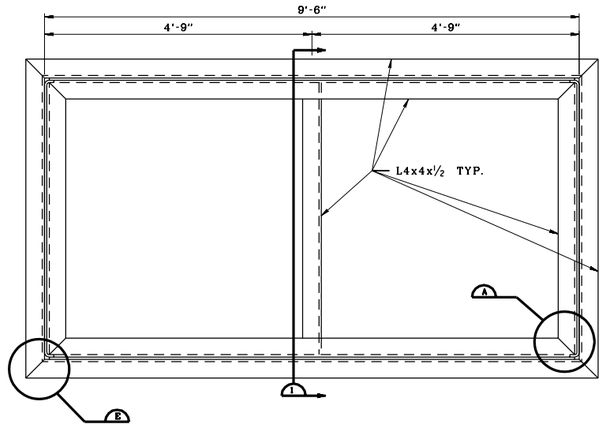

NOTE:
1. SEE SHEET M2.7 FOR PRODUCT RECOVERY TANK DETAILS AND S9.4 FOR ROLLING COVER DETAILS.
2. W-19-4 (1¼x⅛") STEEL BAR GRATING NOT SHOWN. SEE M2.7 NOTES.

TANK VAULT PLAN

SCALE: 1 INCH = 1 FOOT

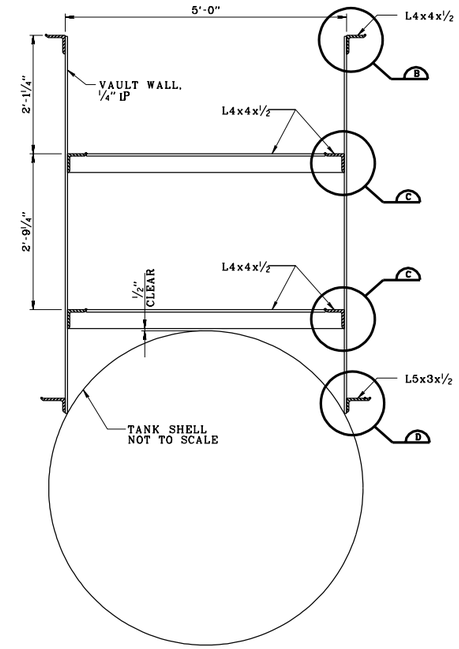

SECTION 1

SCALE: 1 INCH = 1 FOOT

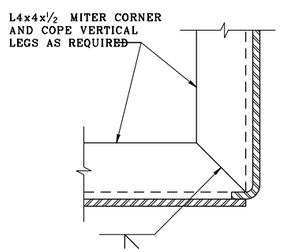

DETAIL A

SCALE: 3 INCHES = 1 FOOT

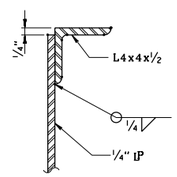

DETAIL B

SCALE: 3 INCHES = 1 FOOT

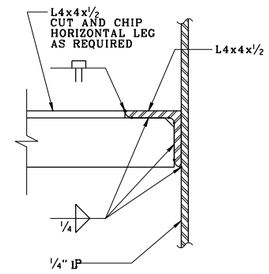

DETAIL C

SCALE: 3 INCHES = 1 FOOT

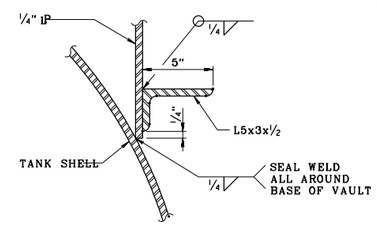

DETAIL D

SCALE: 3 INCHES = 1 FOOT

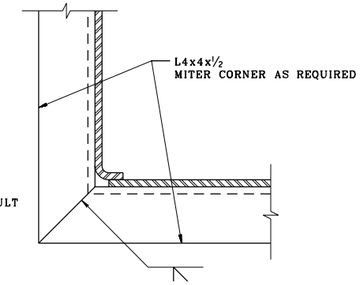

DETAIL E

SCALE: 3 INCHES = 1 FOOT

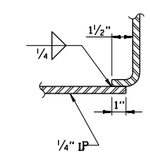

TYPICAL CORNER DETAIL

SCALE: 3 INCHES = 1 FOOT

$$ - THINK VALUE ENGINEERING - $$

REVISIONS

SYMBOL	DESCRIPTIONS	DATE	APPROVED

ROBERT AND COMPANY
96 POPLAR ST., N.W.
ATLANTA, GA 30335

US ARMY ENGINEER DISTRICT
CORPS OF ENGINEERS
OMAHA, NE

AIR FORCE C.E. SUPPORT AGENCY
139 BARNES DRIVE, SUITE #1
TYNDALL AFB, FL 32403-5319

DESIGNED BY: G.M.J.
DRAWN BY: G.M.J.
CHECKED BY: B.N.H.
REVIEWED BY: B.N.H.
SUBMITTED BY:
CHIEF, STRUC SECTION

AIR FORCE STANDARDS
PRESSURIZED HYDRANT FUELING SYSTEM
TYPE III

PRODUCT RECOVERY TANK VAULT DETAILS

PLOT SCALE RATIO: 1:1
DATE: REV. #1 NOV. 1998
DESIGN FILE: SD18S901.DGN
SPEC. NO.: 78-24-28-88
DRAWING CODE: AW 78-24-28
SHEET REFERENCE NUMBER: S9.1

COMPUTER AIDED DESIGN & DRAFTING