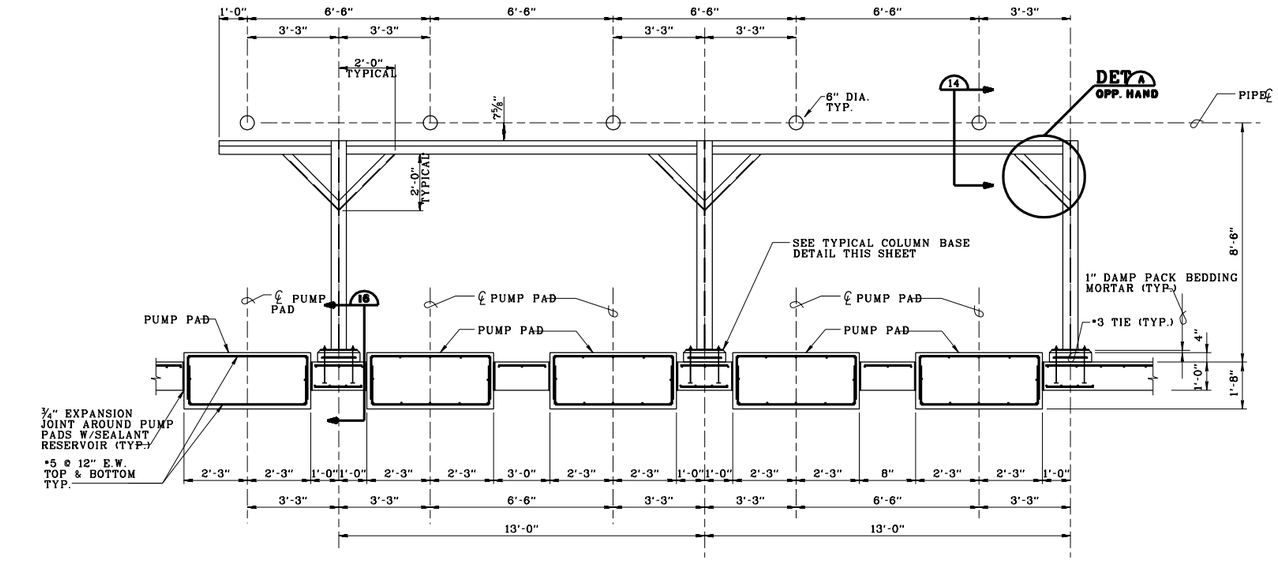

SECTION 9 PS-9
S2.1 S5.2
S2.2
SCALE: 1½ INCH = 1 FOOT

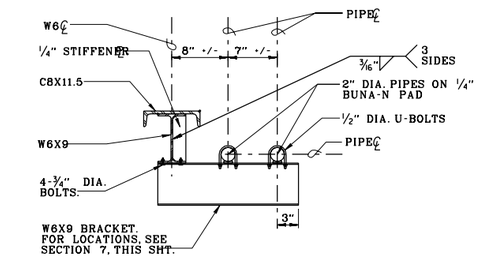

SECTION 15
SCALE: 1½ INCH = 1 FOOT

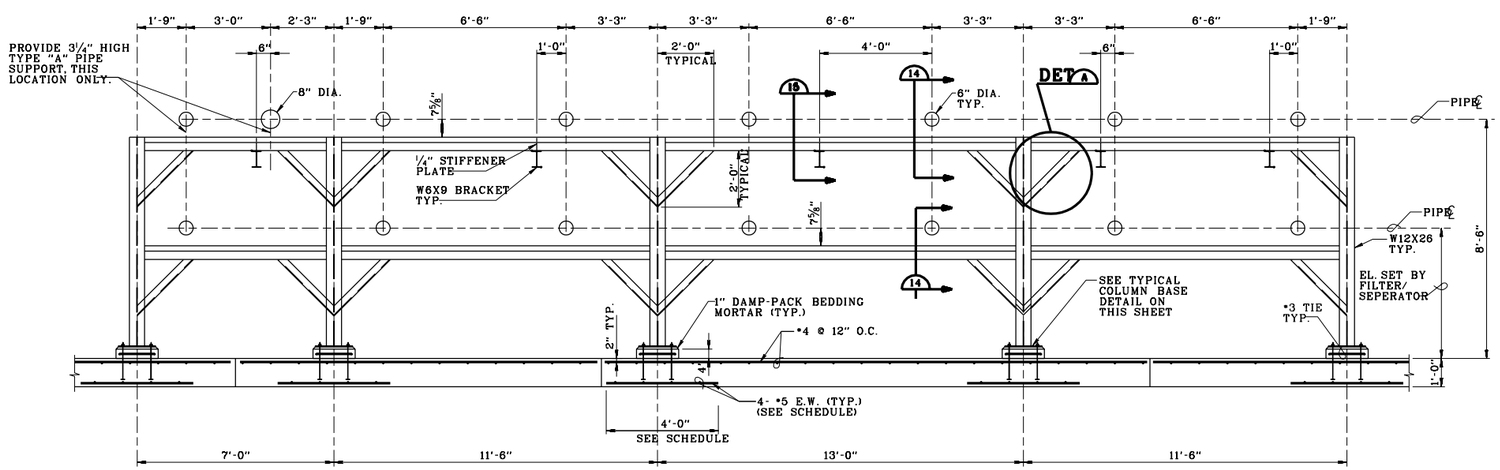

SECTION 12 PS-12
S2.2 S5.2
SCALE: ½ INCH = 1 FOOT

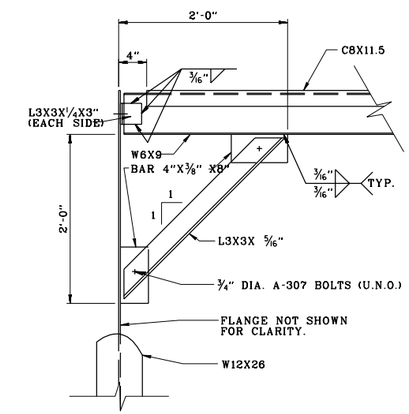

DETAIL A
SCALE: 1½ INCH = 1 FOOT

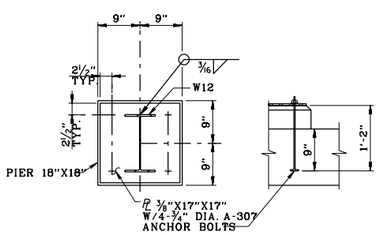

TYPICAL COLUMN BASE
FOR PS-9 & PS-12
SCALE: 1 INCH = 1 FOOT

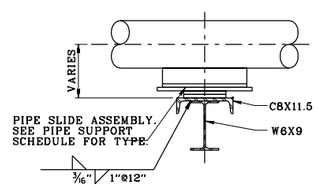

SECTION 14
S5.2 S5.2
S5.3
SCALE: 1½ INCH = 1 FOOT

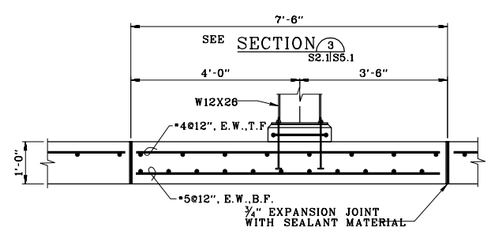

SECTION 16
SCALE: ¾ INCH = 1 FOOT

$$ - THINK VALUE ENGINEERING - $$

REVISIONS

SYMBOL	DESCRIPTIONS	DATE	APPROVED

ROBERT AND COMPANY
96 POPLAR ST., N.W.
ATLANTA, GA 30335

US ARMY ENGINEER DISTRICT
CORPS OF ENGINEERS
OMAHA, NE

AIR FORCE C.E. SUPPORT AGENCY
139 BARNES DRIVE, SUITE *1
TYNDALL AFB, FL 32403-5319

DESIGNED BY: G.M.J.
DRAWN BY: G.M.J.
CHECKED BY: B.N.H.
REVIEWED BY: B.N.H.
SUBMITTED BY:
CHIEF, STRUC SECTION

AIR FORCE STANDARDS
PRESSURIZED HYDRANT FUELING SYSTEM
TYPE III

PIPE SUPPORT SECTIONS AND DETAILS

PLOT SCALE RATIO: 2:3
DESIGN FILE: SD18S502.DGN
DATE: REV. *1 NOV. 1998
SPEC. NO.: 78-24-28-88
DRAWING CODE: AW 78-24-28
SHEET REFERENCE NUMBER: S5.2

COMPUTER AIDED DESIGN & DRAFTING