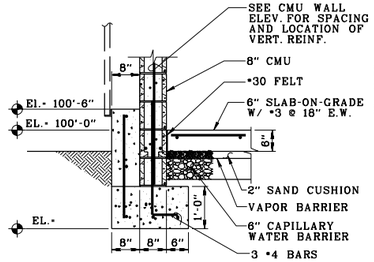

SECTION 1 S2.1 IS5.1
SCALE 3/4" INCH = 1 FOOT

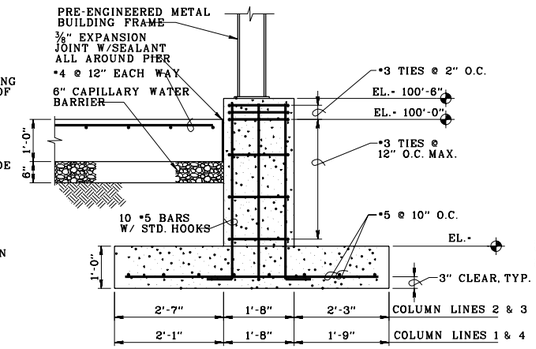

SECTION 2 S2.1 IS5.1 S5.1
SCALE 3/4" INCH = 1 FOOT

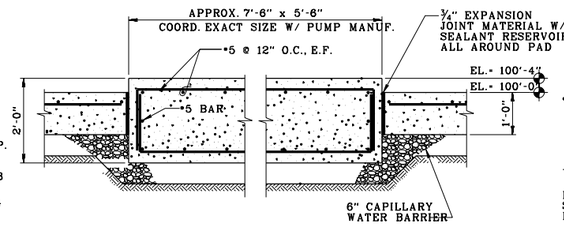

SECTION 3 S2.1 IS5.1
SCALE 3/4" INCH = 1 FOOT

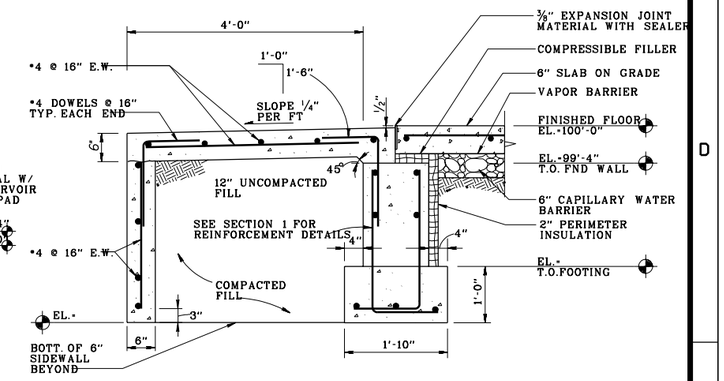

SECTION 4 S2.1 IS5.1
SCALE: 1 INCH = 1 FOOT

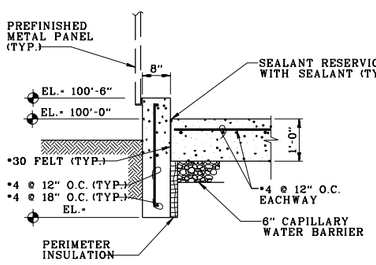

SECTION 5 S2.1 IS5.1
SCALE 3/4" INCH = 1 FOOT

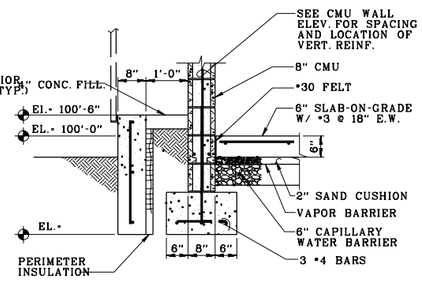

SECTION 6 S2.1 IS5.1
SCALE 3/4" INCH = 1 FOOT

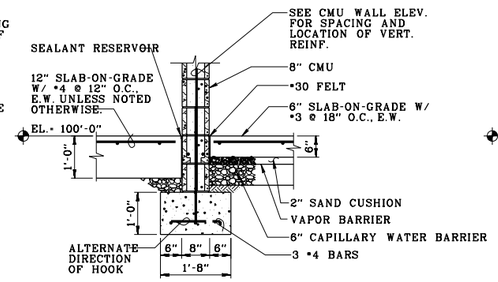

SECTION 7 S2.1 IS5.1
SCALE 3/4" INCH = 1 FOOT

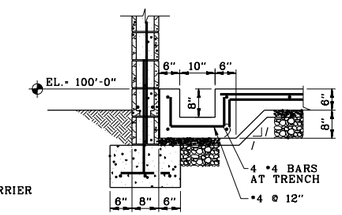

NOTE: SEE SECTIONS 6 AND 7 FOR ADDITIONAL INFORMATION.

SECTION 10 S2.1 IS5.1
SCALE 3/4" INCH = 1 FOOT

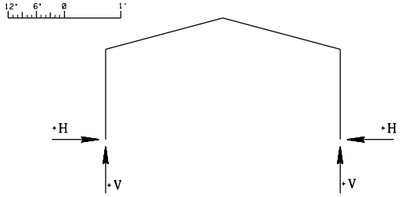

FRAME REACTIONS, KIPS				
LOAD COMB.	COLUMN LINES 2 & 3		COLUMN LINES 1 & 4	
	H	V	H	V
1	#.#	#.#	#.#	#.#
2	#.#	#.#	#.#	#.#

LOAD COMBINATIONS

1. DEAD + COLLATERAL + LIVE + MIN. CRANE
2. DEAD + COLLATERAL + LIVE + MAX. CRANE

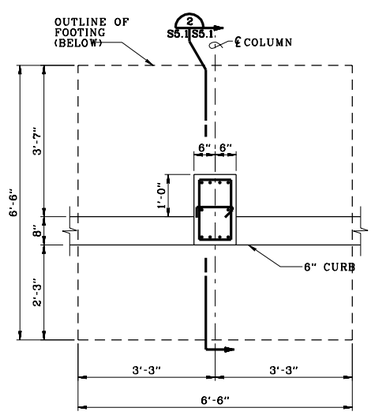

INTERIOR PILASTER DETAIL S2.1 IS5.1
SCALE 3/4" INCH = 1 FOOT

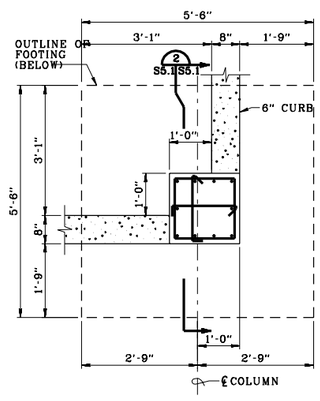

CORNER PILASTER DETAIL S2.1 IS5.1
SCALE 3/4" INCH = 1 FOOT

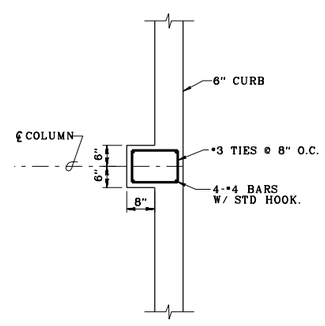

DETAIL C S2.1 IS5.1
SCALE 3/4" INCH = 1 FOOT

NOTES TO THE DESIGNER:

FOUNDATION DESIGN

1. THE FOUNDATION MUST BE DESIGNED FOR THE LOADS IMPOSED BY THE METAL BUILDING. FOUNDATION DESIGN LOADS MUST BE SHOWN ON THE DRAWING FOR VERIFICATION.
2. PLAN AND DETAILS SHOWN ARE FOR A TYPICAL INSTALLATION. THE FOUNDATION MUST BE DESIGNED FOR SITE SPECIFIC CRITERIA INCLUDING DESIGN LOADS (DEAD, LIVE, COLLATERAL, WIND, SNOW, CRANE AND SEISMIC) AND THE RECOMMENDATIONS OF THE FOUNDATION REPORT (ALLOWABLE BEARING PRESSURES, TYPE OF FOUNDATION, SOIL DENSITY, AND LATERAL EARTH PRESSURE COEFFICIENTS).
3. BOTTOM OF FOOTING ELEVATION AND SLAB SUBGRADE PREPARATION SHALL BE AS RECOMMENDED BY THE FINAL FOUNDATION REPORT.

COMPUTER AIDED DESIGN & DRAFTING

$$ - THINK VALUE ENGINEERING - $$

REVISIONS			
SYMBOL	DESCRIPTIONS	DATE	APPROVED

ROBERT AND COMPANY
96 POPLAR ST., N.W.
ATLANTA, GA 30335

US ARMY ENGINEER DISTRICT
CORPS OF ENGINEERS
OMAHA, NE

AIR FORCE C.E. SUPPORT AGENCY
139 BARNES DRIVE, SUITE #1
TYNDALL AFB, FL 32403-5319

DESIGNED BY: G.M.J.
DRAWN BY: G.M.J.
CHECKED BY: B.N.H.
REVIEWED BY: B.N.H.
SUBMITTED BY:
CHIEF, STRUC SECTION

AIR FORCE STANDARDS
PRESSURIZED HYDRANT FUELING SYSTEM
TYPE III

FOUNDATION & SLAB SECTIONS AND DETAILS

PLOT SCALE RATIO: 4:3
DESIGN FILE: SD18S501.DGN
DATE: REV. #1 NOV. 1998
SHEET REFERENCE NUMBER:
SPEC. NO.: 78-24-28-88
DRAWING CODE: AW 78-24-28
S5.1

SD18S501.DGN 11/18/2002 10:01:45 AM