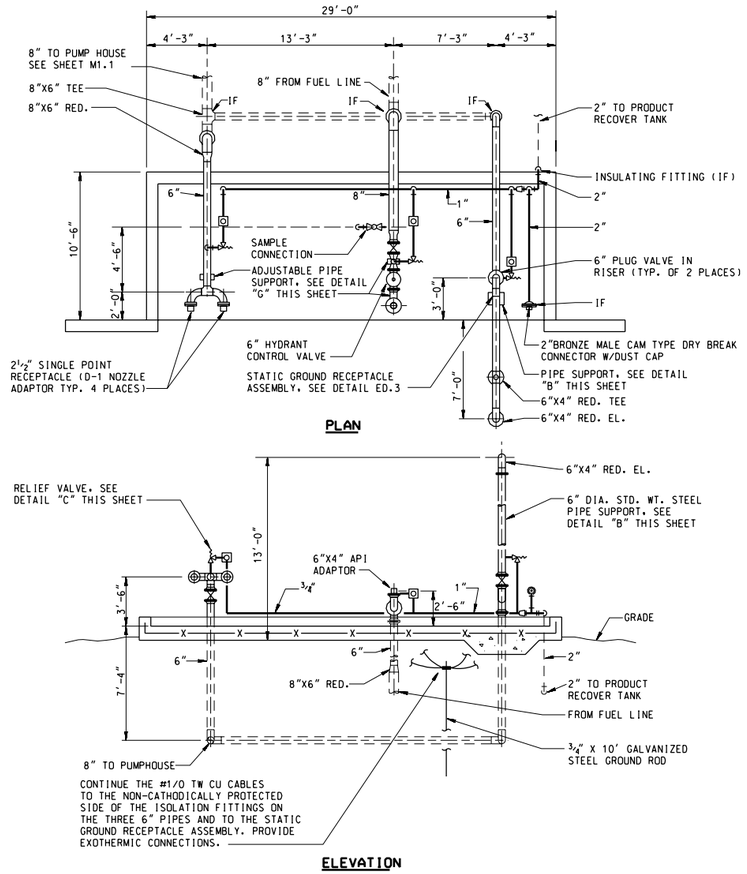

PLAN

ELEVATION

HYDRANT HOSE TRUCK CHECK-OUT STATION (A) M2.1MD.4

SCALE : 1/4 INCH = 1 FOOT

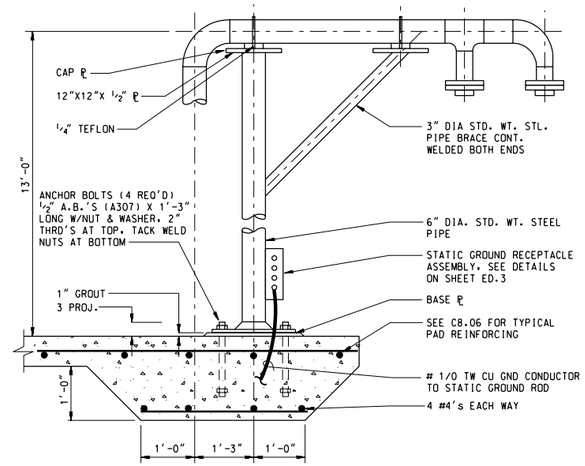

PIPE SUPPORT DETAIL (B) MD.4MD.4

NO SCALE

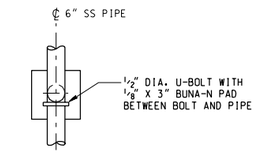

CAP PLATE

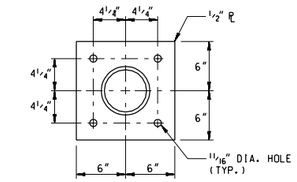

BASE PLATE

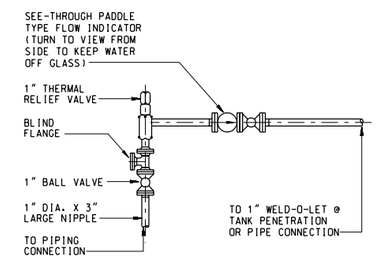

THERMAL RELIEF VALVE PIPING (N) MD.4MD.4

NO SCALE

NOTE:

1. ALL FITTINGS TO BE SOCKET.WELD TYPE EXCEPT AS INDICATED. ALL VALVES SHALL BE FLANGED, AND ALL PIPE SCHEDULE 80

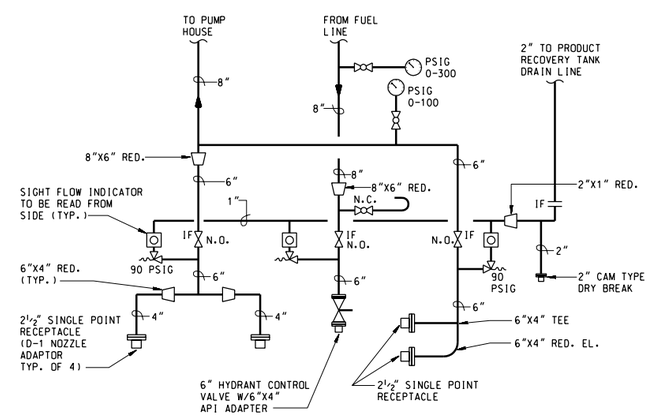

HYDRANT HOSE TRUCK CHECK-OUT STATION PIPING DIAGRAM (G) M2.1MD.4

NO SCALE

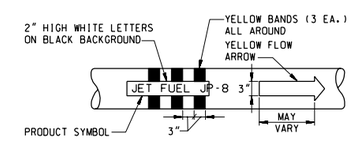

PRODUCT FLOW SYMBOL DETAIL (E) GENMD.4

NO SCALE

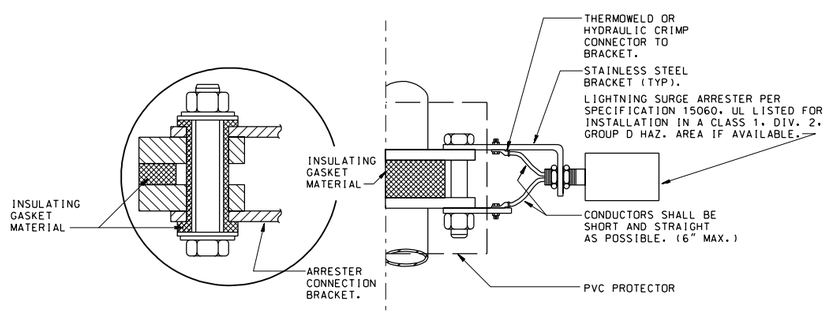

LIGHTNING SURGE ARRESTER DETAIL (B) MD.4MD.4 MD.6 M1.1 M2.3

NO SCALE

NOTE:

WRAP ENTIRE INSULATING FLANGE IN PVC PIPING AND SECURE WITH STAINLESS STEEL BAND CLAMP. LEAVE LIGHTNING SURGE ARRESTER EXPOSED.

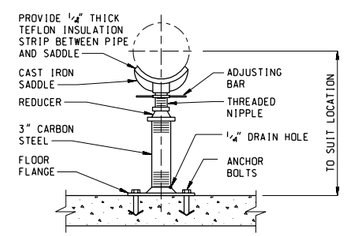

ADJUSTABLE PIPE SADDLE SUPPORT DETAIL (G) MD.4MD.4

NO SCALE

SCALE: ¼ INCH = 1 FOOT

COMPUTER AIDED DESIGN & DRAFTING

$$ - THINK VALUE ENGINEERING - $$

REVISIONS

SYMBOL	DESCRIPTIONS	DATE	APPROVED

ROBERT AND COMPANY
96 POPLAR ST., N.W.
ATLANTA, GA 30335

US ARMY ENGINEER DISTRICT
CORPS OF ENGINEERS
OMAHA, NE

AIR FORCE C.E. SUPPORT AGENCY
139 BARNES DRIVE, SUITE #1
TYNDALL AFB, FL 32403-5319

DESIGNED BY: J.J.P.
DRAWN BY: P.R.W.
CHECKED BY: M.T.S.
REVIEWED BY: S.G.E.
SUBMITTED BY:
CHIEF, MECH. SECTION

AIR FORCE STANDARDS
PRESSURIZED HYDRANT FUELING SYSTEM
TYPE III

HYDRANT HOSE TRUCK CHECK - OUT DETAILS

PLOT SCALE RATIO: 4:1
DESIGN FILE: SD18MD04.DGN
DATE: REV. #1 NOV. 1998
SPEC. NO.: 78-24-28-88
DRAWING CODE: AW 78-24-28
SHEET REFERENCE NUMBER: MD.4

SD18MD04.DGN 11/18/2002 09:59:20 AM