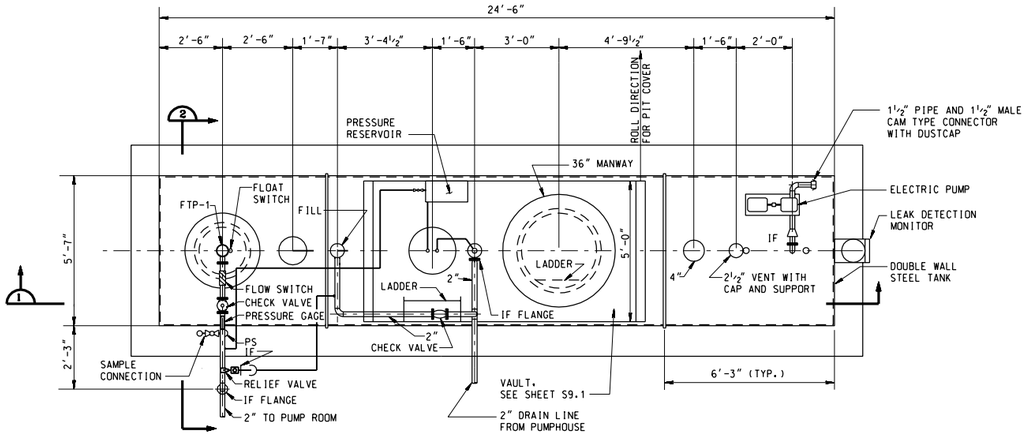

4000 GALLON PRODUCT RECOVERY TANK DETAIL 1 M1.1M2.7

NO SCALE

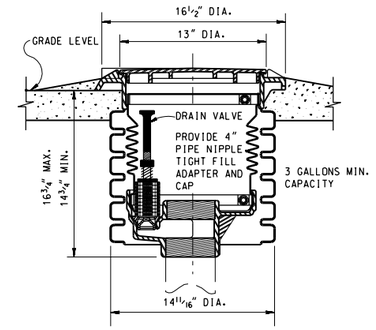

FILL LINE SPILL CONTAINMENT BASIN DETAIL 2

NO SCALE

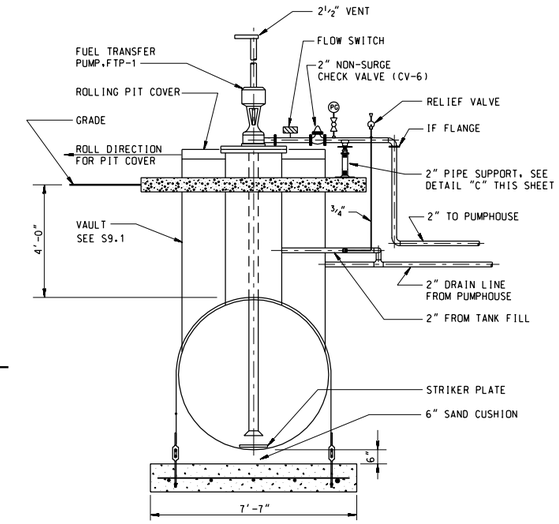

SECTION 2 1

NO SCALE

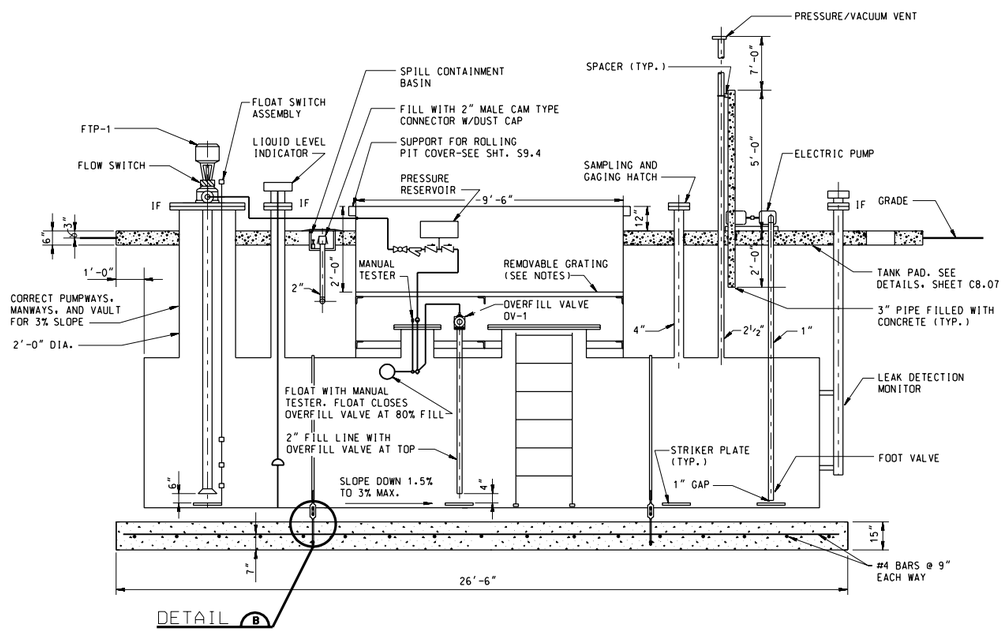

DETAIL B

SECTION 1 1

NO SCALE

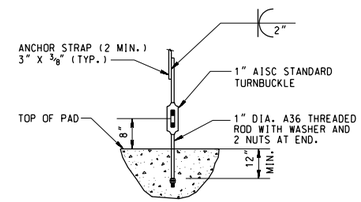

DETAIL B

NO SCALE

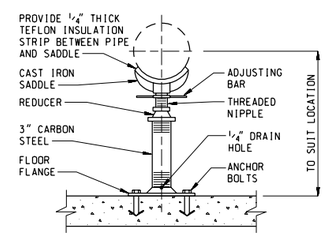

ADJUSTABLE PIPE SADDLE SUPPORT DETAIL 3

NO SCALE

BAR GRATING NOTES:

1. W-19-4 (1¼" X⅛") STEEL.
2. GRATING SHALL BE FABRICATED IN ACCORDANCE WITH THE APPLICABLE PROVISIONS OF THE NATIONAL ASSOCIATION OF ARCHITECTURAL METAL MANUFACTURER'S (NAAMM) BAR GRATING MANUAL.
3. GRATING SHALL BE REMOVABLE.
4. EDGES OF BAR GRATINGS SHALL BE BANDED WITH BARS ⅛" LESS IN DEPTH THAN THE BEARING BARS. BANDING BARS SHALL BE FLUSH TOP OF BEARING BEARS.
5. BAR GRATING SHALL BE GALVANIZED IN ACCORDANCE WITH ASTM A 123.
6. MAXIMUM WIDTH OF BAR GRATING SEGMENT SHALL BE 4'-0".

MATERIAL NOTES:

1. MISC. STEEL:
   A. BARS FOR TANK ANCHOR STRAPS: SPECIFIED YIELD STRENGTH Fy = 36 KSI (ASTM A36)
   B. CONCRETE REINFORCING BARS: SPECIFIED YIELD STRENGTH Fy = 60 KSI (GRADE 60)

$$ - THINK VALUE ENGINEERING - $$

REVISIONS

SYMBOL	DESCRIPTIONS	DATE	APPROVED

ROBERT AND COMPANY
96 POPLAR ST., N.W.
ATLANTA, GA 30335

US ARMY ENGINEER DISTRICT
CORPS OF ENGINEERS
OMAHA, NE

AIR FORCE C.E. SUPPORT AGENCY
139 BARNES DRIVE, SUITE 1
TYNDALL AFB, FL 32403-5319

DESIGNED BY: J.J.P.
DRAWN BY: P.R.W.
CHECKED BY: M.T.S.
REVIEWED BY: S.G.E.
SUBMITTED BY:
CHIEF, MECH. SECTION

AIR FORCE STANDARDS
PRESSURIZED HYDRANT FUELING SYSTEM
TYPE III

PRODUCT RECOVERY TANK DETAILS

PLOT SCALE RATIO: 1:12
DESIGN FILE: SD18M207.DGN
DATE: REV. 1 NOV. 1998
SPEC. NO.: 78-24-28-88
DRAWING CODE: AW 78-24-28
SHEET REFERENCE NUMBER: M2.7

COMPUTER AIDED DESIGN & DRAFTING

SD18M207.DGN 11/18/2002 09:56:23 AM