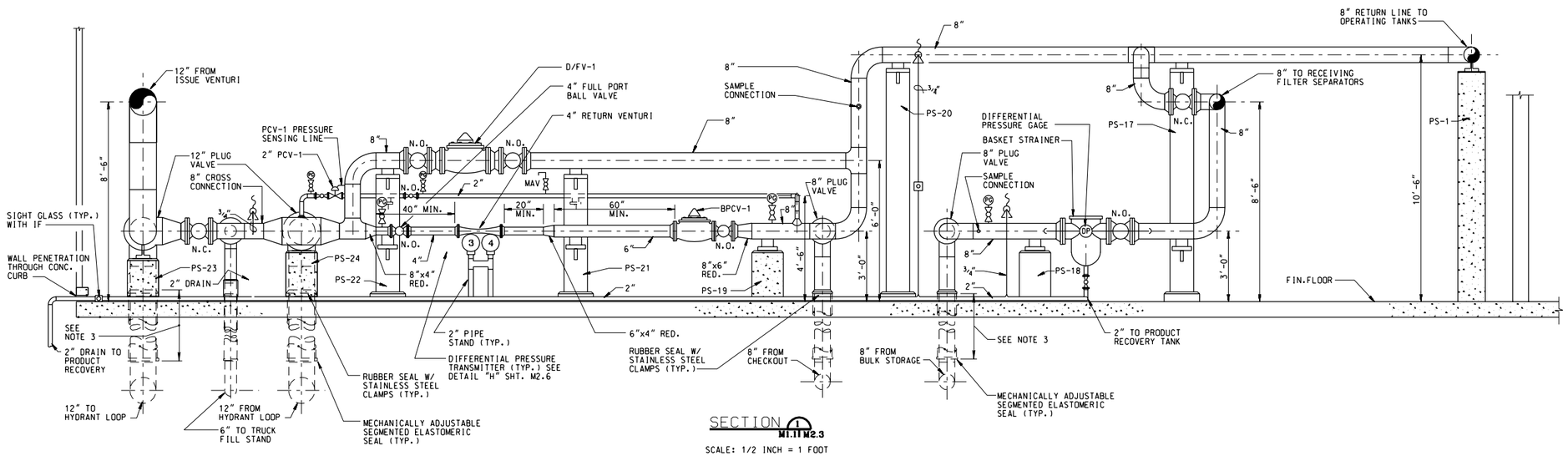

SECTION 1 M1.1 M2.3

SCALE: 1/2 INCH = 1 FOOT

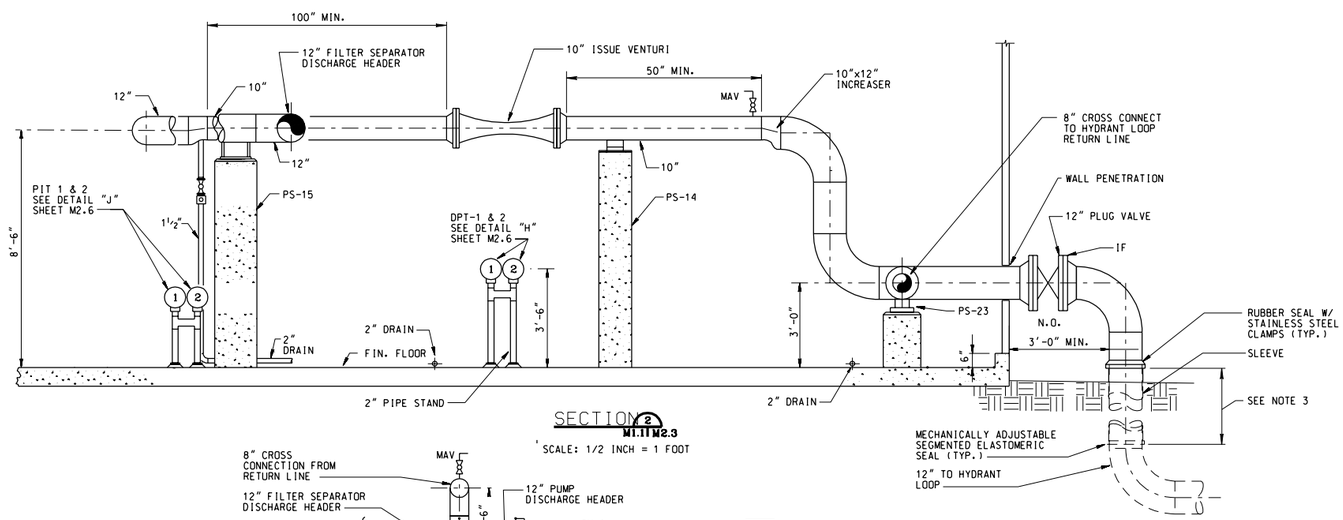

SECTION 2 M1.1 M2.3

SCALE: 1/2 INCH = 1 FOOT

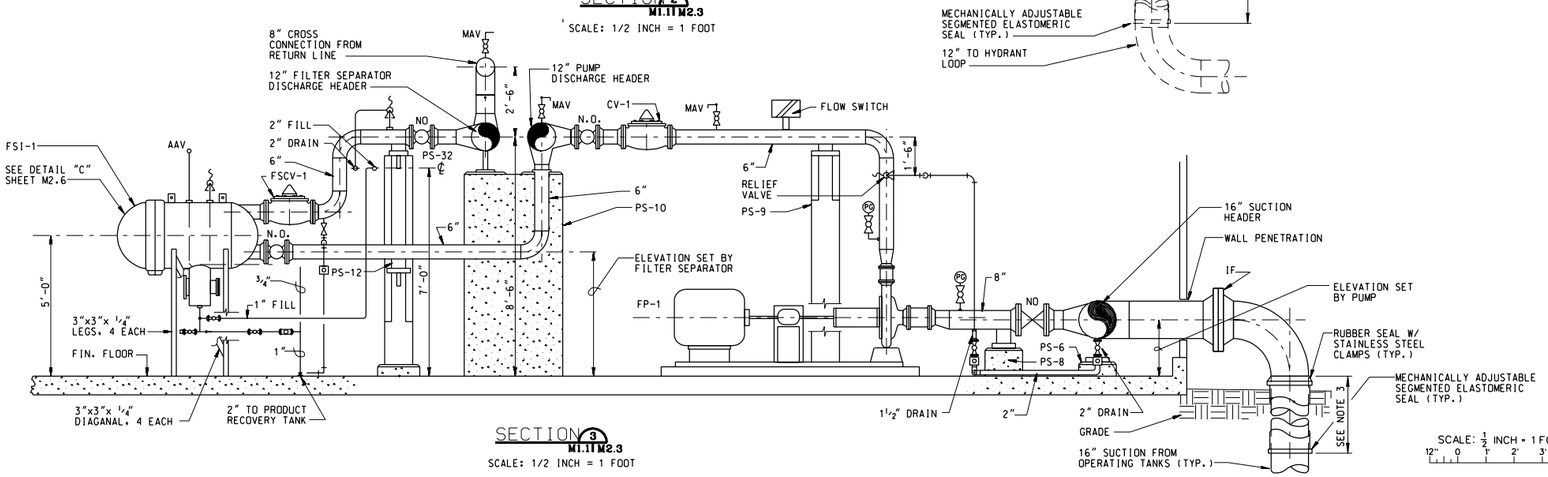

SECTION 3 M1.1 M2.3

SCALE: 1/2 INCH = 1 FOOT

SCALE: 1/2 INCH = 1 FOOT

NOTES:

1. VALVE STEMS ON ALL MANUAL VALVES SHALL BE HORIZONTAL OR ABOVE WITH OPERATORS ON TOP OF VALVES.
2. SUPPORT 2" DRAIN LINES WITH PIPE CENTERLINE 3" ABOVE FINISHED FLOOR USE CHANNEL SUPPORTS WITH U BOLT ANCHORING.
3. THE TOP OF THE SLEEVE SHALL BE A MINIMUM OF 6" ABOVE GRADE AND THE BOTTOM OF THE SLEEVE SHALL BE BELOW FROST.

$$ - THINK VALUE ENGINEERING - $$

REVISIONS			
SYMBOL	DESCRIPTIONS	DATE	APPROVED

ROBERT AND COMPANY
96 POPLAR ST., N.W.
ATLANTA, GA 30335

US ARMY ENGINEER DISTRICT
CORPS OF ENGINEERS
OMAHA, NE

AIR FORCE C.E. SUPPORT AGENCY
139 BARNES DRIVE, SUITE #1
TYNDALL AFB, FL 32403-5319

DESIGNED BY: J.J.P.
DRAWN BY: P.R.W.
CHECKED BY: M.T.S.
REVIEWED BY: S.G.E.
SUBMITTED BY:
CHIEF, MECH. SECTION

AIR FORCE STANDARDS
PRESSURIZED HYDRANT FUELING SYSTEM
TYPE III

PIPING SECTIONS

PLOT SCALE RATIO: 2:1
DESIGN FILE: SD18M203.DGN
DATE: REV. #1 NOV. 1998
SPEC. NO.: 78-24-28-88
DRAWING CODE: AW 78-24-28
SHEET REFERENCE NUMBER: M2.3

COMPUTER AIDED DESIGN & DRAFTING

SCALE: 1/2 INCH = 1 FOOT

SD18M203.DGN 11/18/2002 09:54:55 AM